25

TNG 1996-2021

La Palma Oct 19th, 2021

A visionary project:
The technological development inspired by the TNG

Roberto Ragazzoni (INAF-OAPd/UniPD)

The TNG site

The photo has been shooted by Valentina Zitelli

What is TNG

- It is the “photocopy” of the NTT
- In this project we have the luxury that basic things have been sorted out by someone else (ESO) and we can focus on making fancy and strange modfications pretending to improve it…
- TNG has been the very first national project where everyone worked with, in perspective, a single target and a generation of people learn to develop instrumentation working as a single community

What is TNG

- It is the “photocopy” of the NTT

Adriano Maurizio

- In this project we have the luxury that basic things have been sorted out by someone else (ESO) and we can focus on making fancy and strange modfications pretending to improve it…

Favio (but we all called him Fabio) Bortoletto

- TNG has been the very first national project where everyone worked with, in perspective, a single target and a generation of people learn to develop instrumentation working as a single community

Flavio Fusi Pecci

Disclaimer

- I recollected notes, pictures, documents from that time…
- I would need a week or a month or maybe more more than what I estimated just to sort out everything…
- I have been impressed myself from the amount of novelties, innovations, nw paradigms that we were willing to inject into such a project…
- The following is a very partial and very personal point of view recollection of that wonderful times…
- I am pretty sure I missed to mention so much persons, episodes, and crazy or strange things we were willing to look at the sky through the new telescope named to our respected ancestor

Making it "with style"

TNG Instrument Plan
A Progress Report

F. Fusi Pecci, G.M. Stirpe

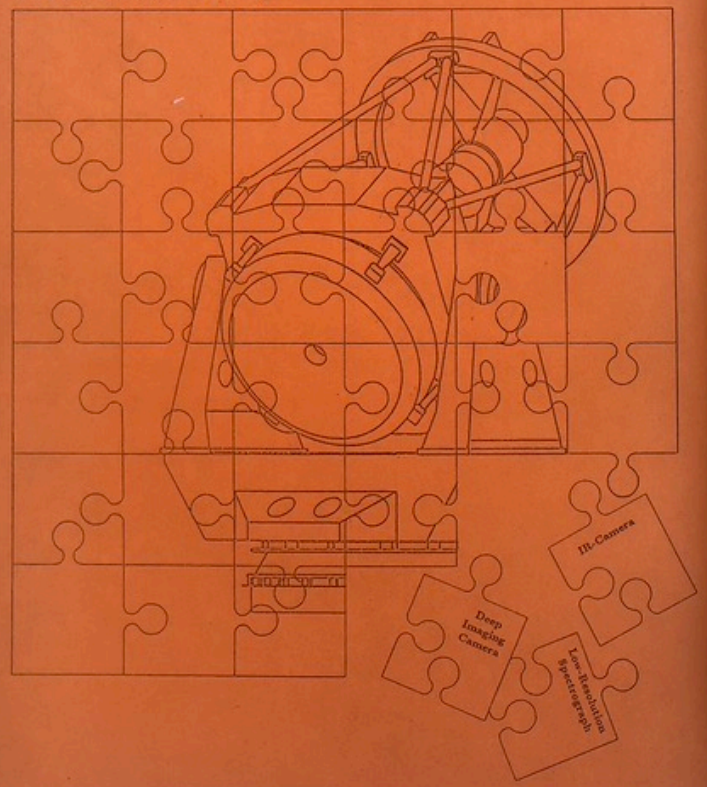

March 1992

TNG Instrument Plan: II
A Progress Report

F. Fusi Pecci, G. Stirpe, V. Zitelli eds.

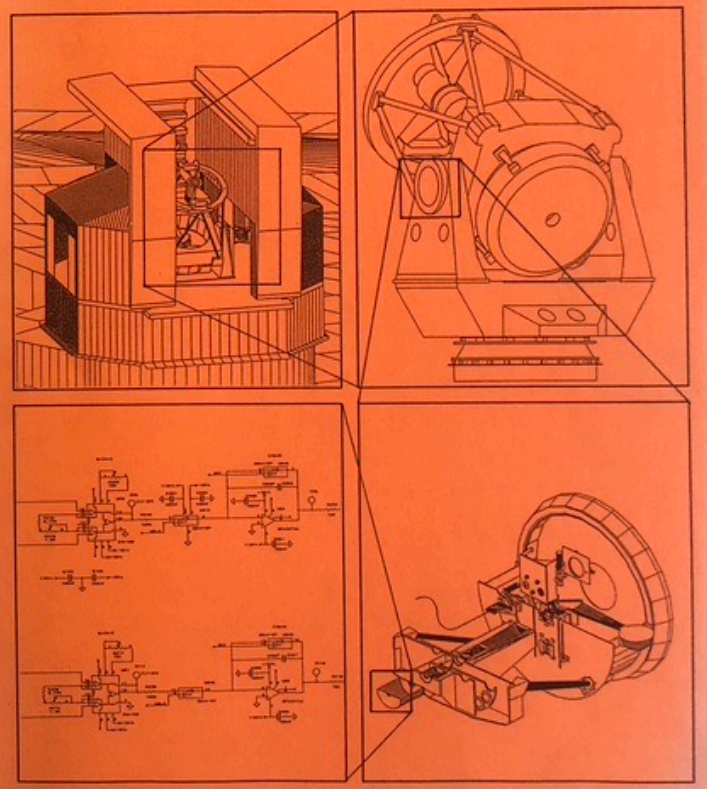

December 1994

AdOpt@TNG *Adaptive Optics at the Telescopio Nazionale Galileo*

Yearly Status Report **August 1996**

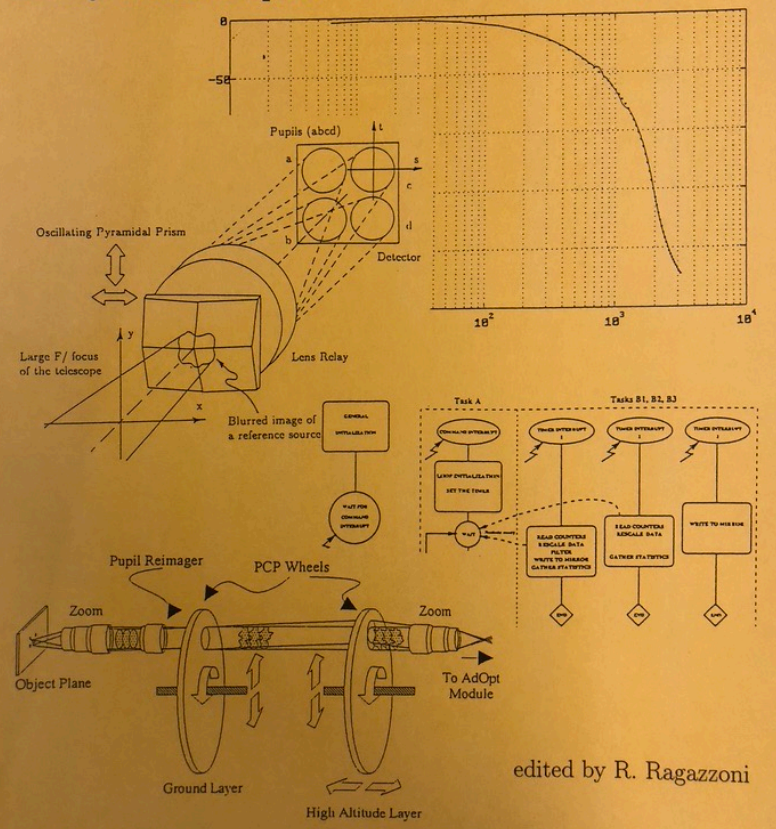

edited by R. Ragazzoni

A Prime Focus Corrector

Spiders of the TNG vs NTT

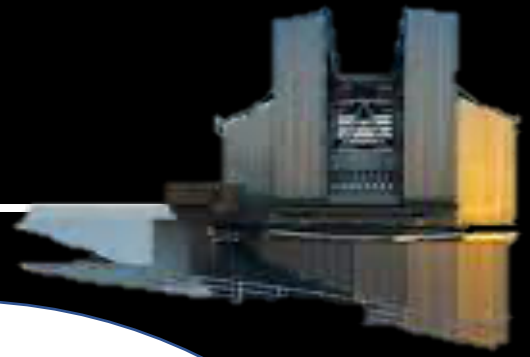

NTT

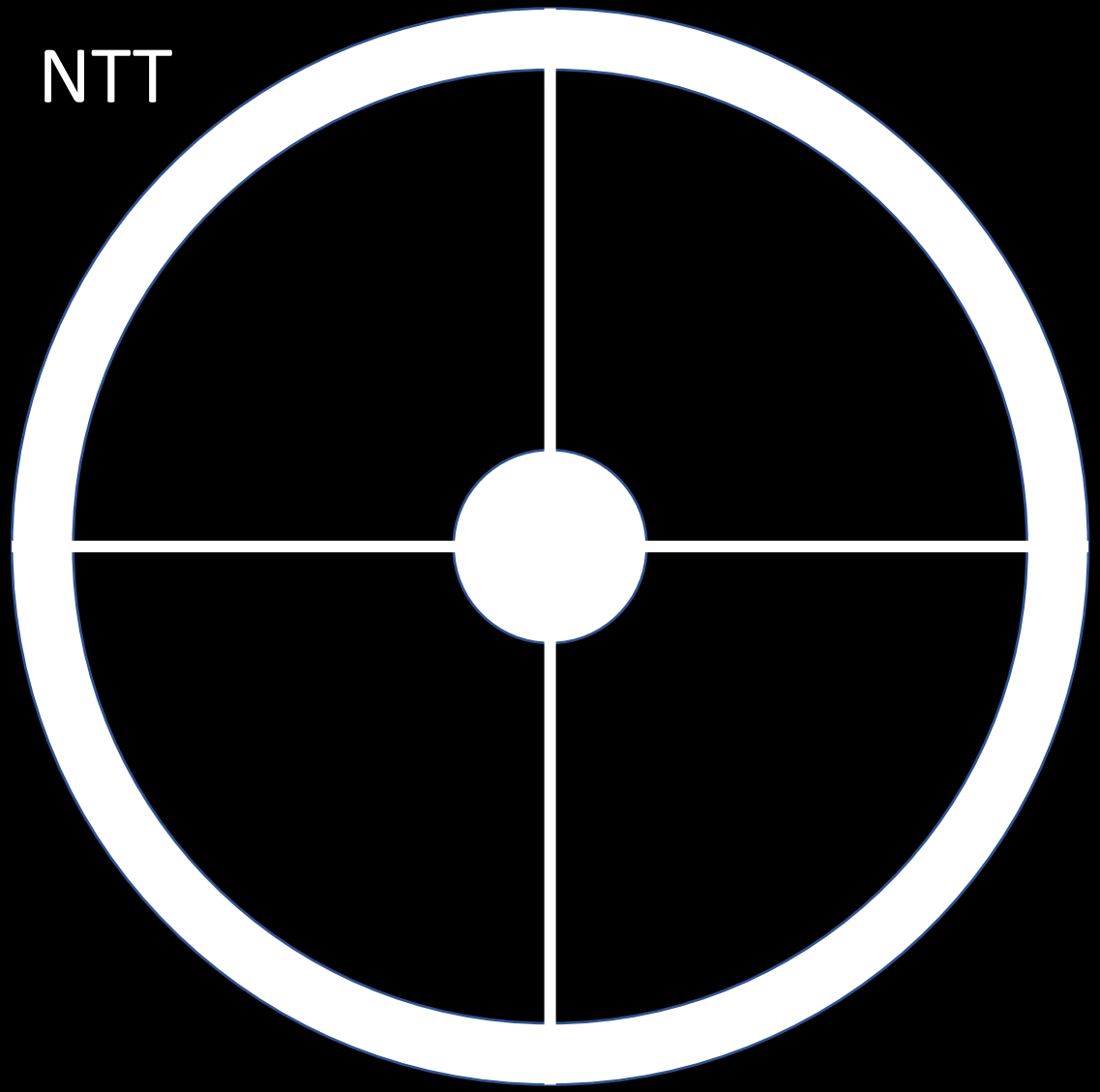

TNG

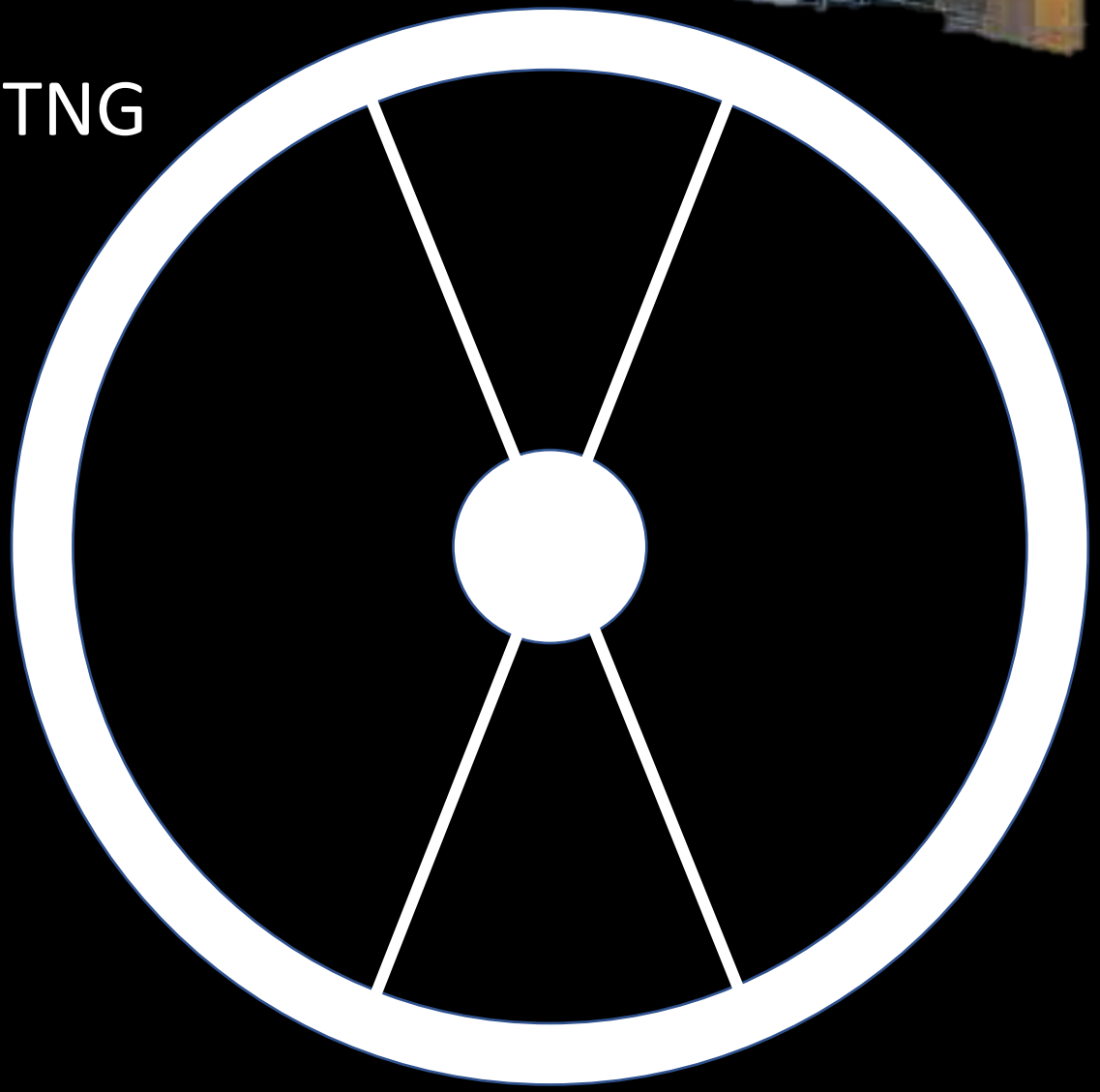

Spiders of the TNG vs NTT

NTT

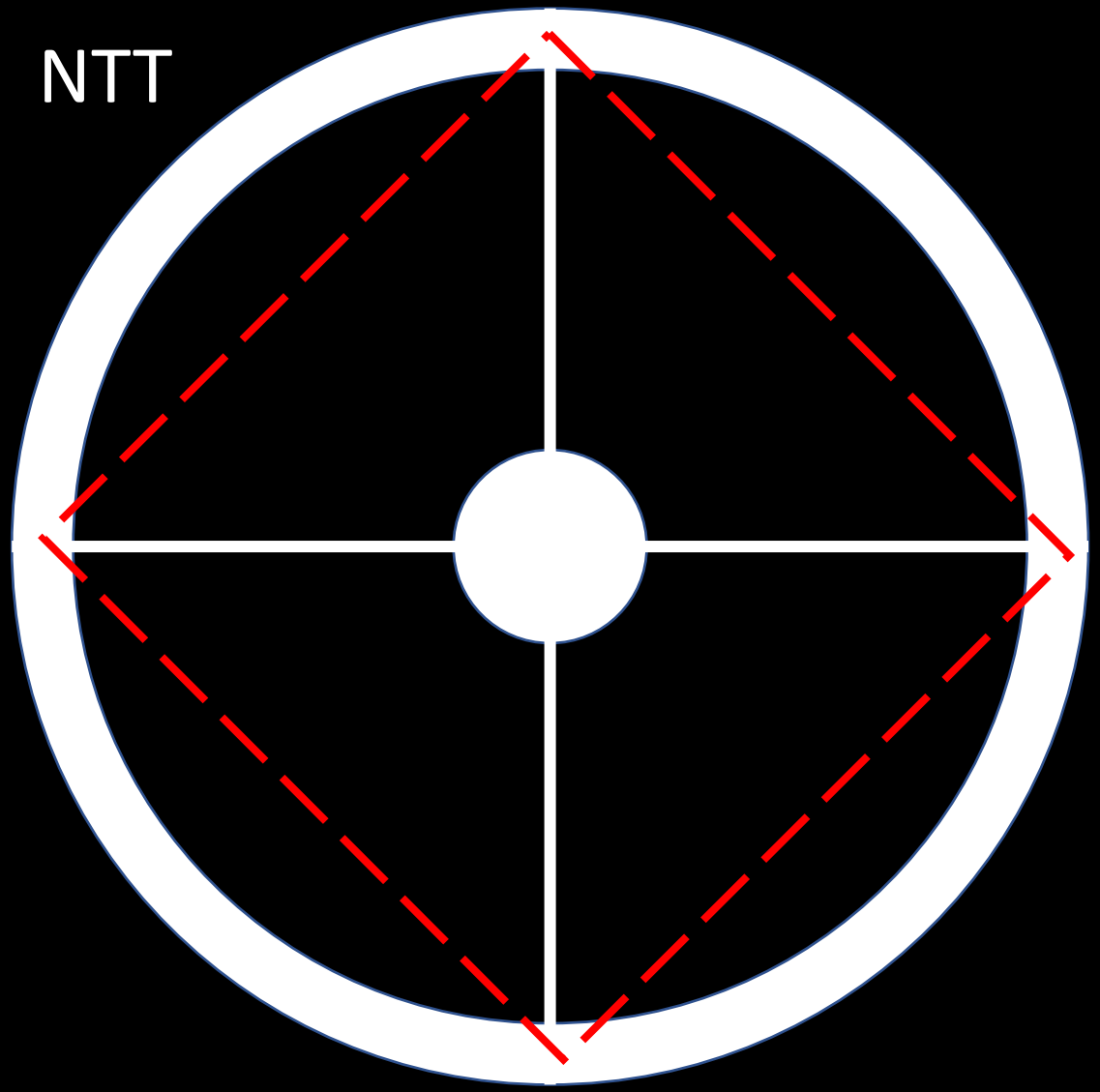

TNG

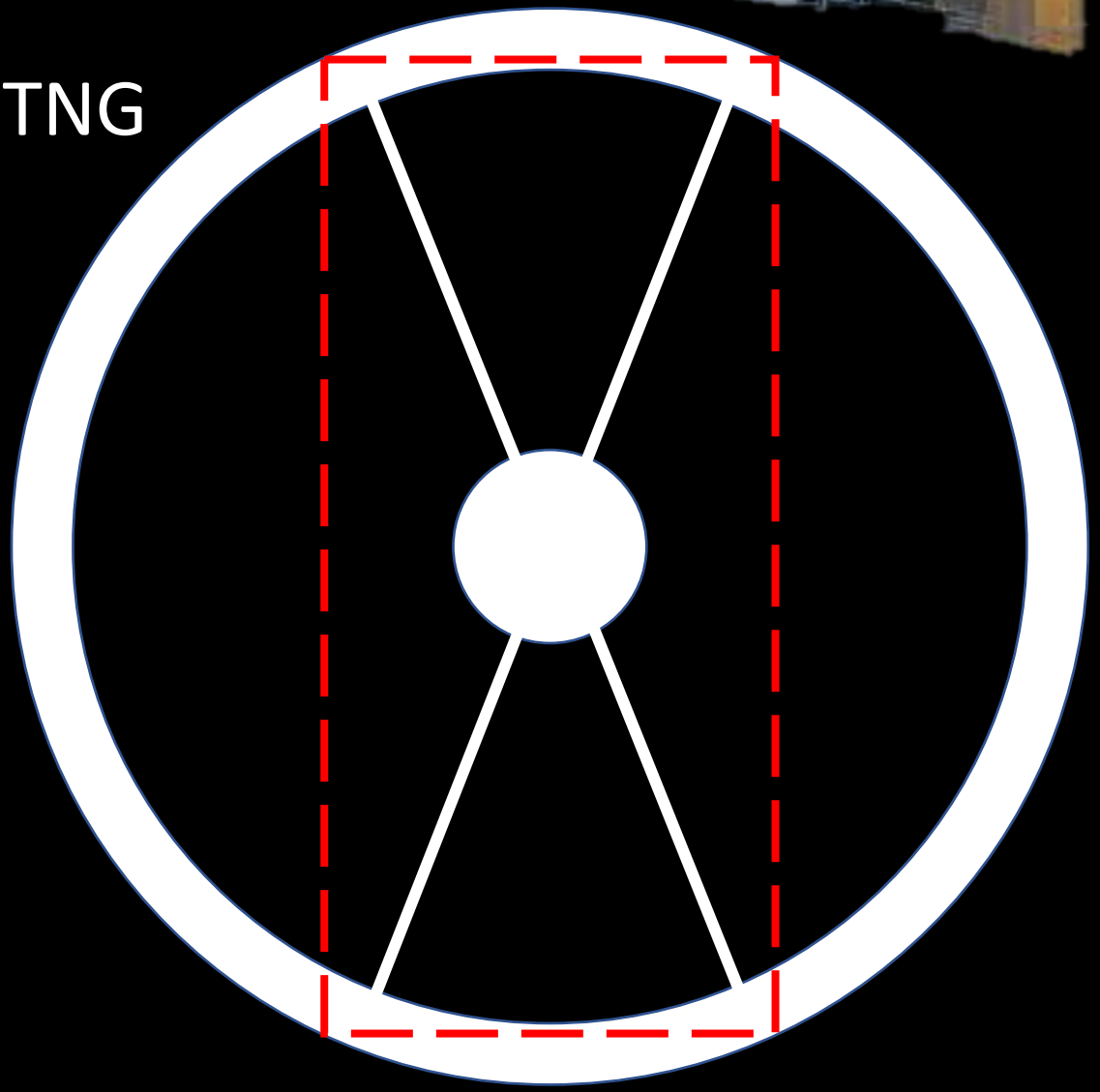

Diffraction from the 60deg TNG spiders

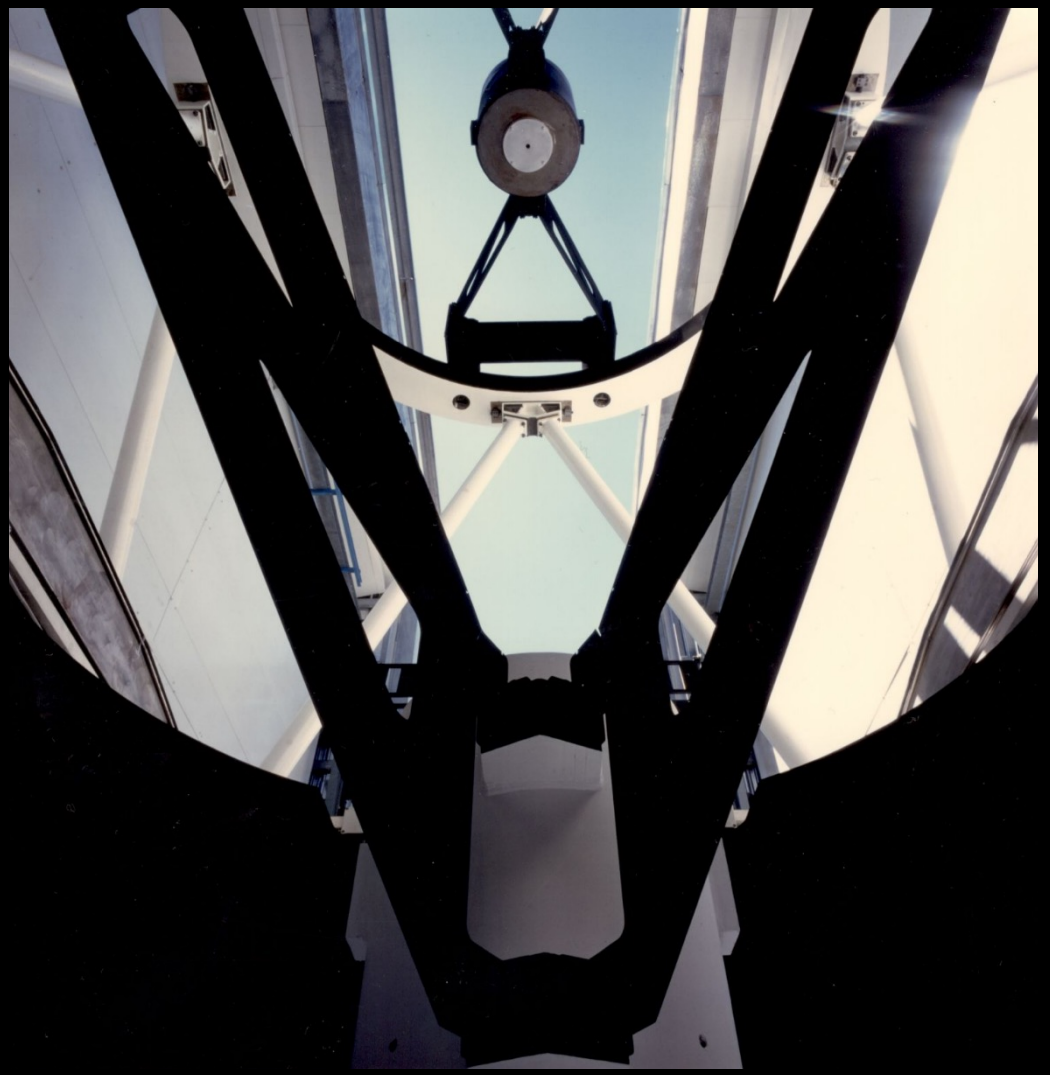

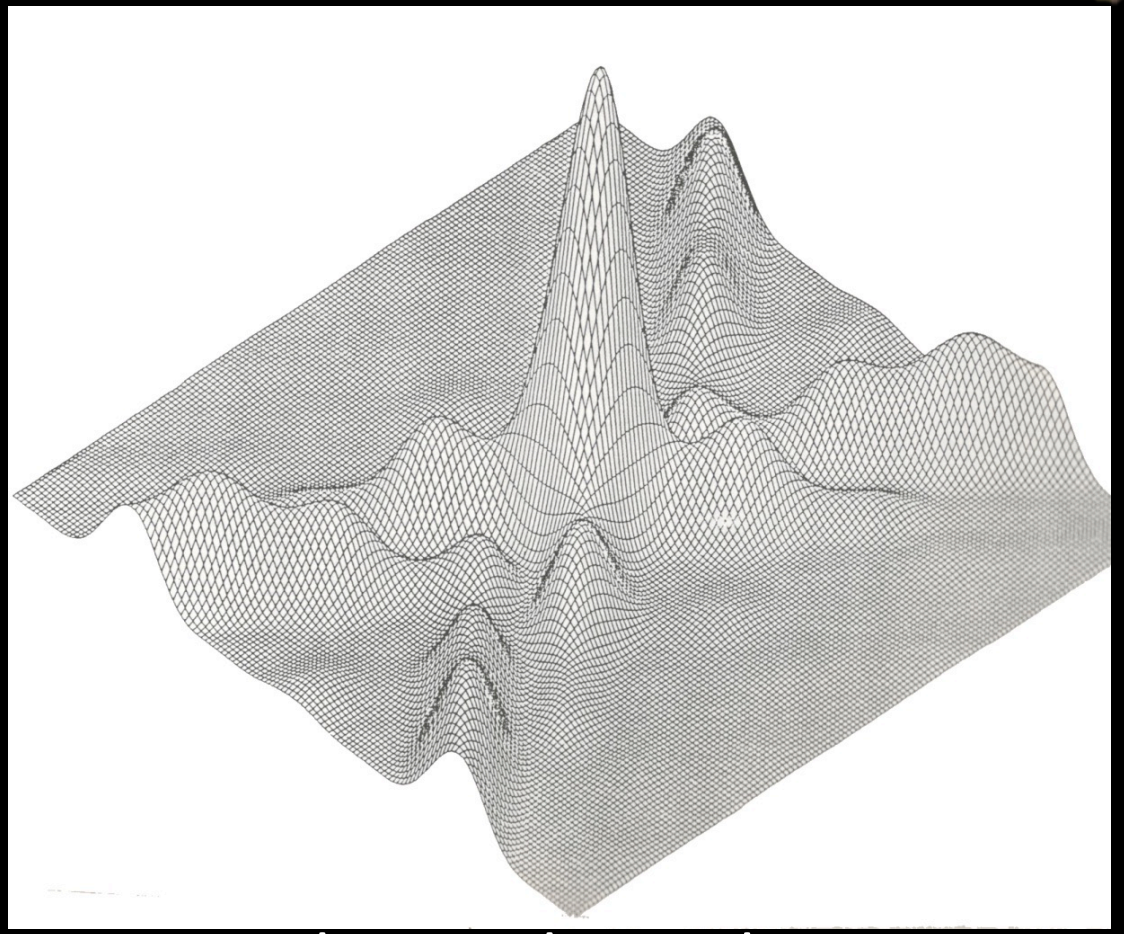

Notice the two large clean areas
(P. Conconi)

Diffraction from the 60deg TNG spiders

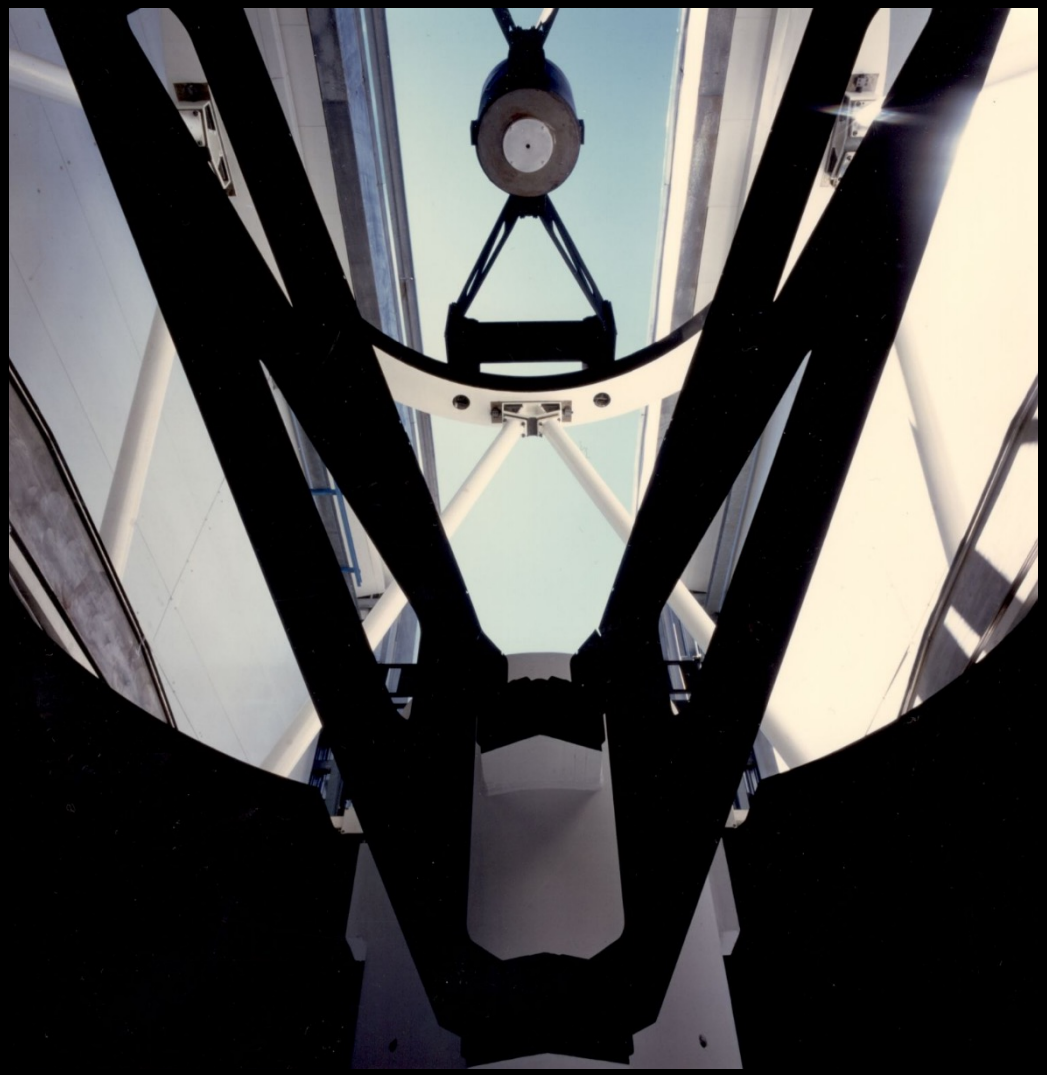

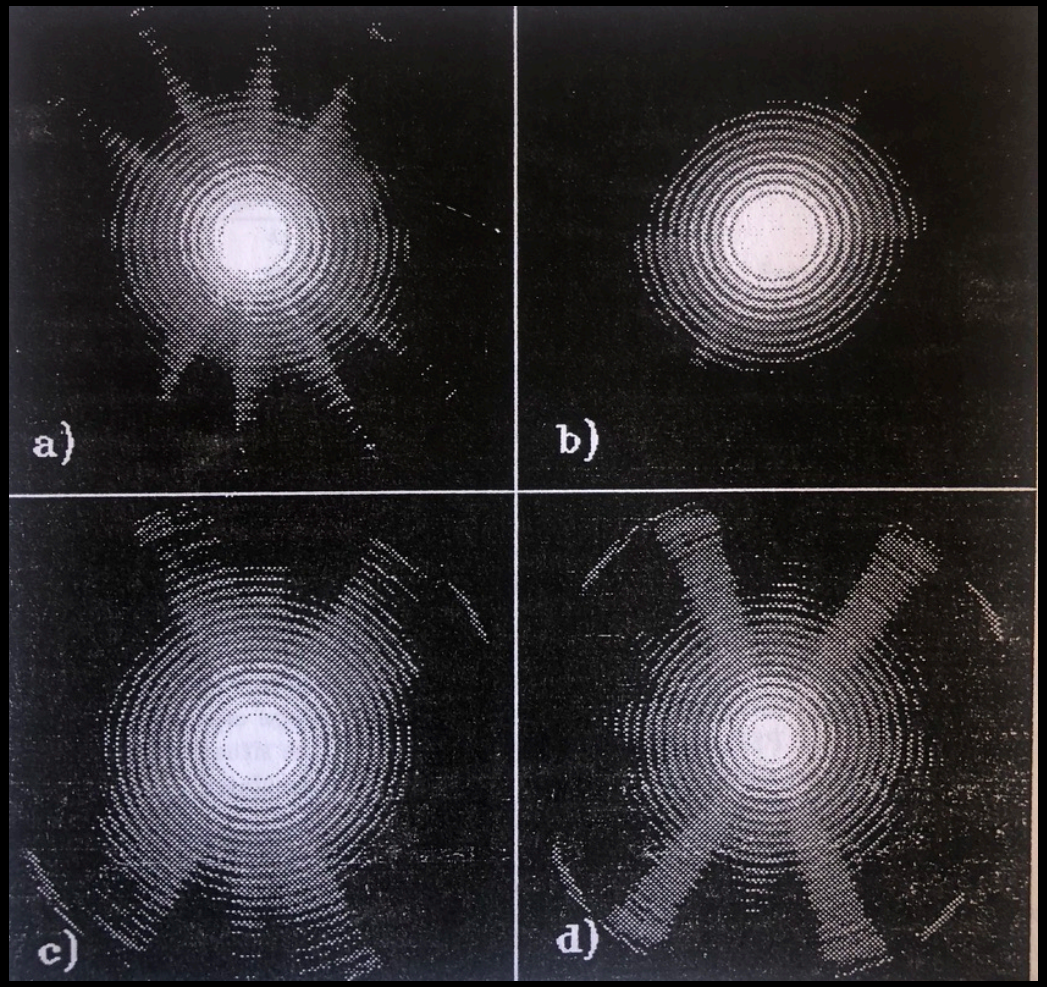

From the TNG Instrument Plan (Fusi Pecci ed.)

Writing your own software...

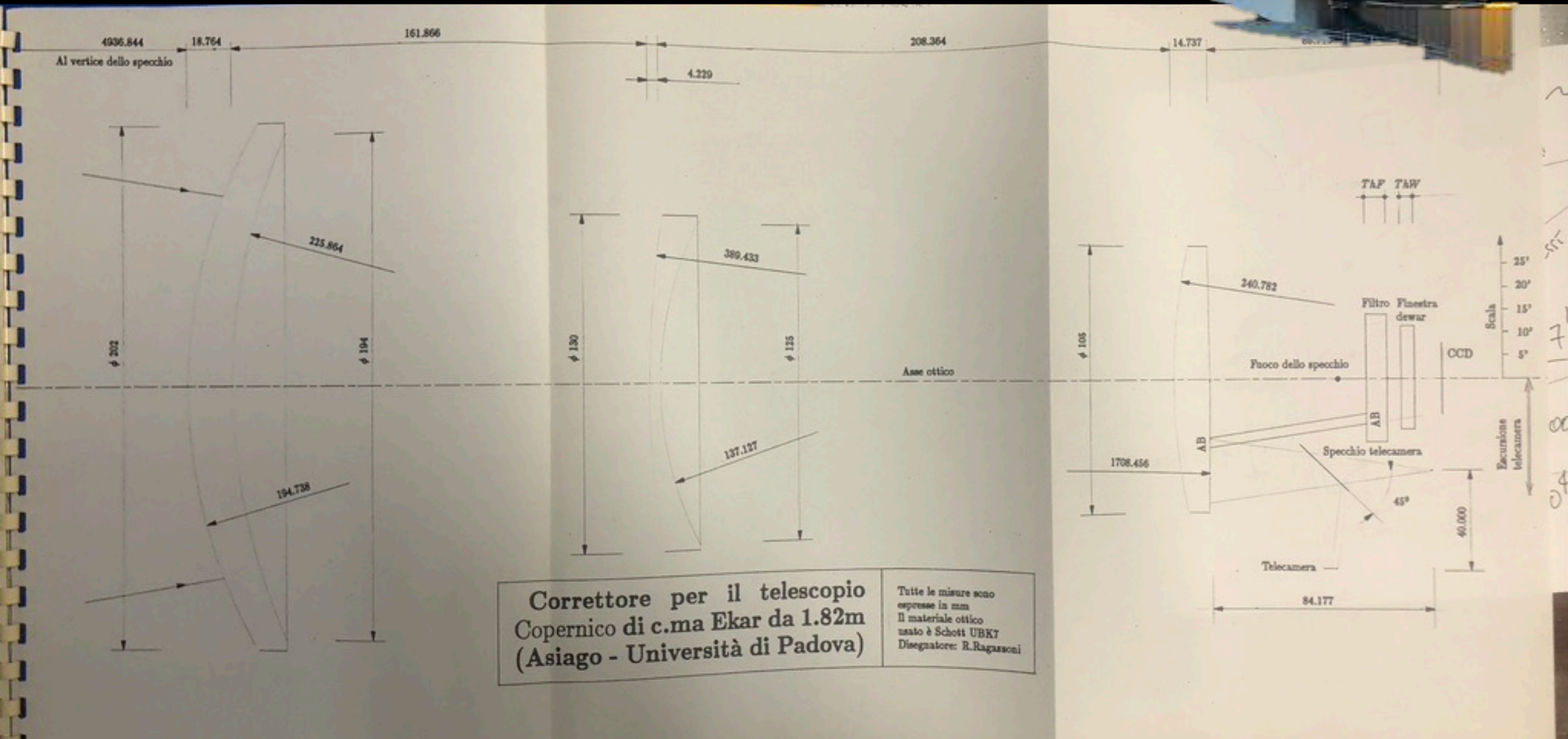

Writing your own software…

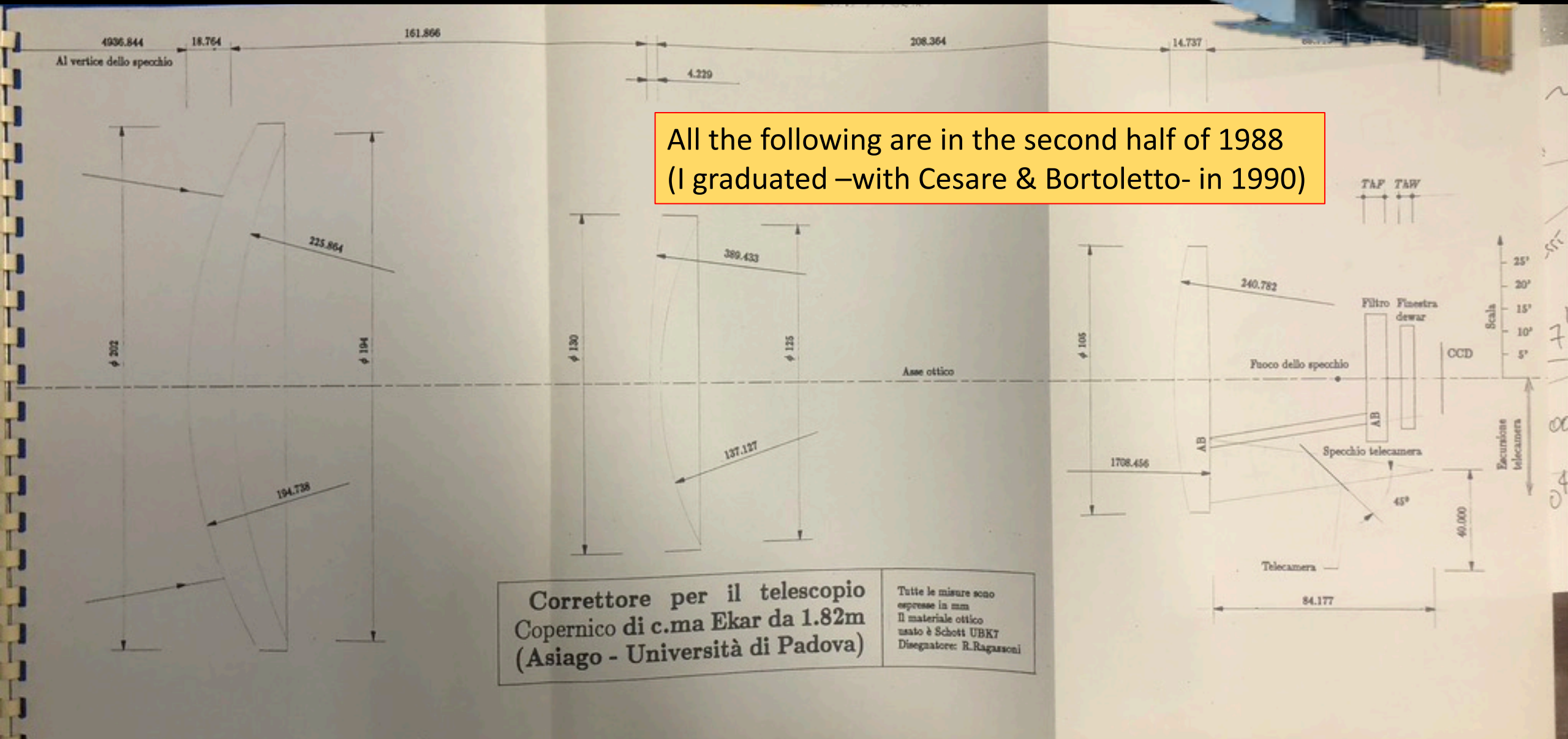

All the following are in the second half of 1988
(I graduated –with Cesare & Bortoletto- in 1990)

Early days for parallel computing...

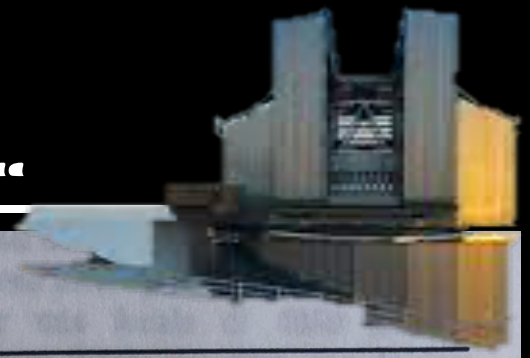

Studio preliminare per la progettazione di un correttore a tre lenti

Roberto Ragazzoni
2 Novembre 1988

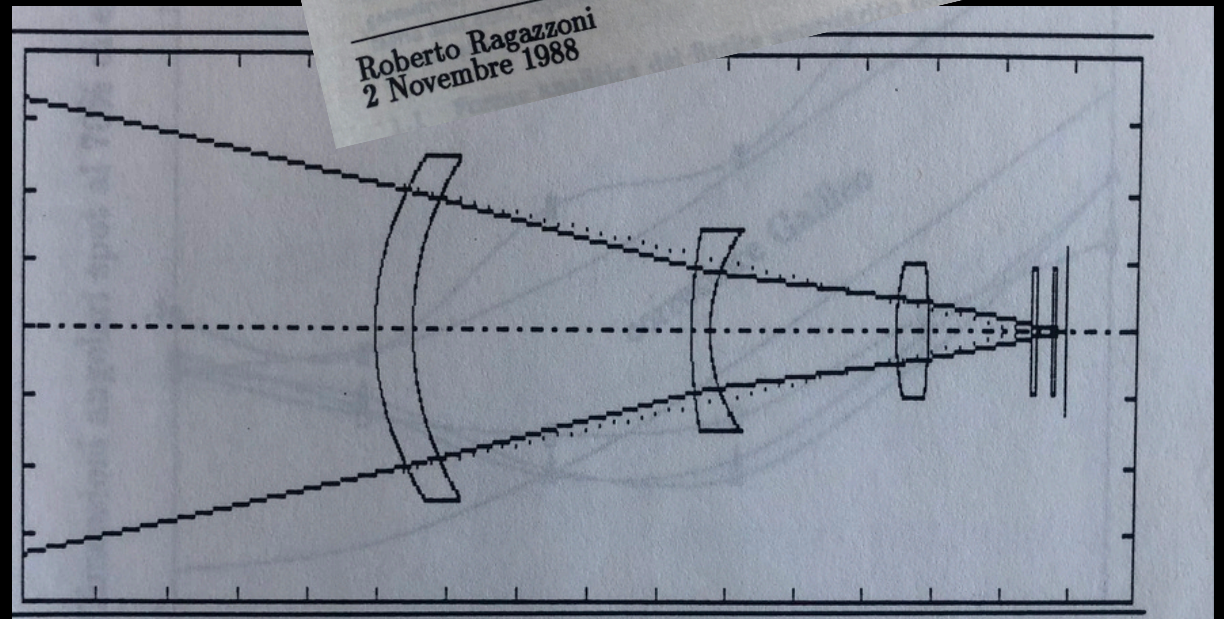

Figura 16: Il correttore a tre lenti trovato durante il processo di ottimizzazione.

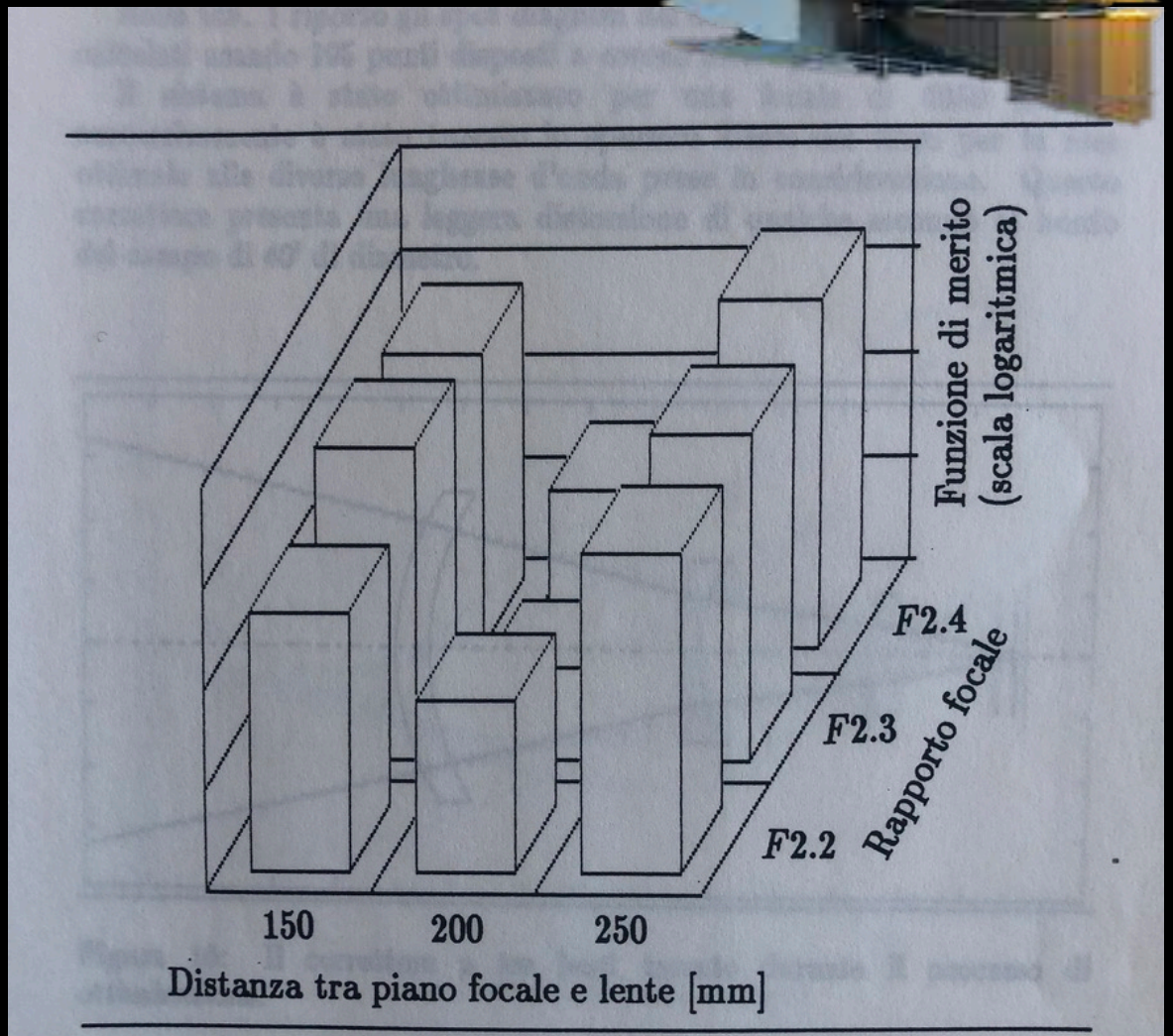

Figura 15: Una ricerca a *tappeto* del miglior correttore.

Almost one deg

Elemento	Raggio di curvatura	Separazione assiale	Materiale	Diametro
Specchio	15400	6759.427	aria	3500
Lente 1	462.760	55	UBK7	500
	489.469	401.258	aria	
Lente 2	816.673	25	UBK7	300
	265.836	272.288	aria	
Lente 3	499.303	44	UBK7	250
	1000.056	100	aria	
Filtro	piatto	13	UBK7	
	piatto	87	aria	

Tabella 1: Elementi costruttivi del correttore.

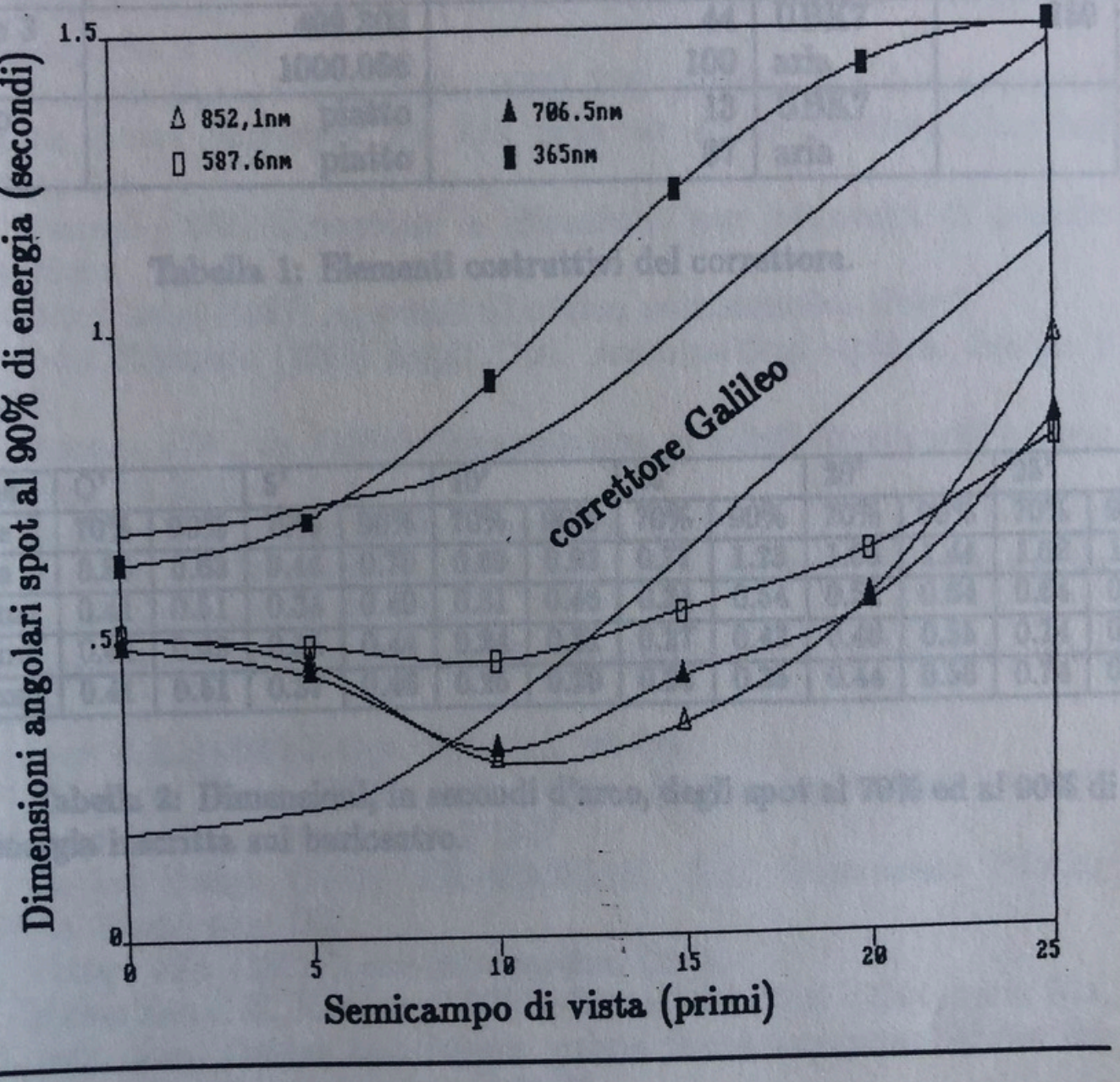

An F/2.4 Prime Focus for the TNG

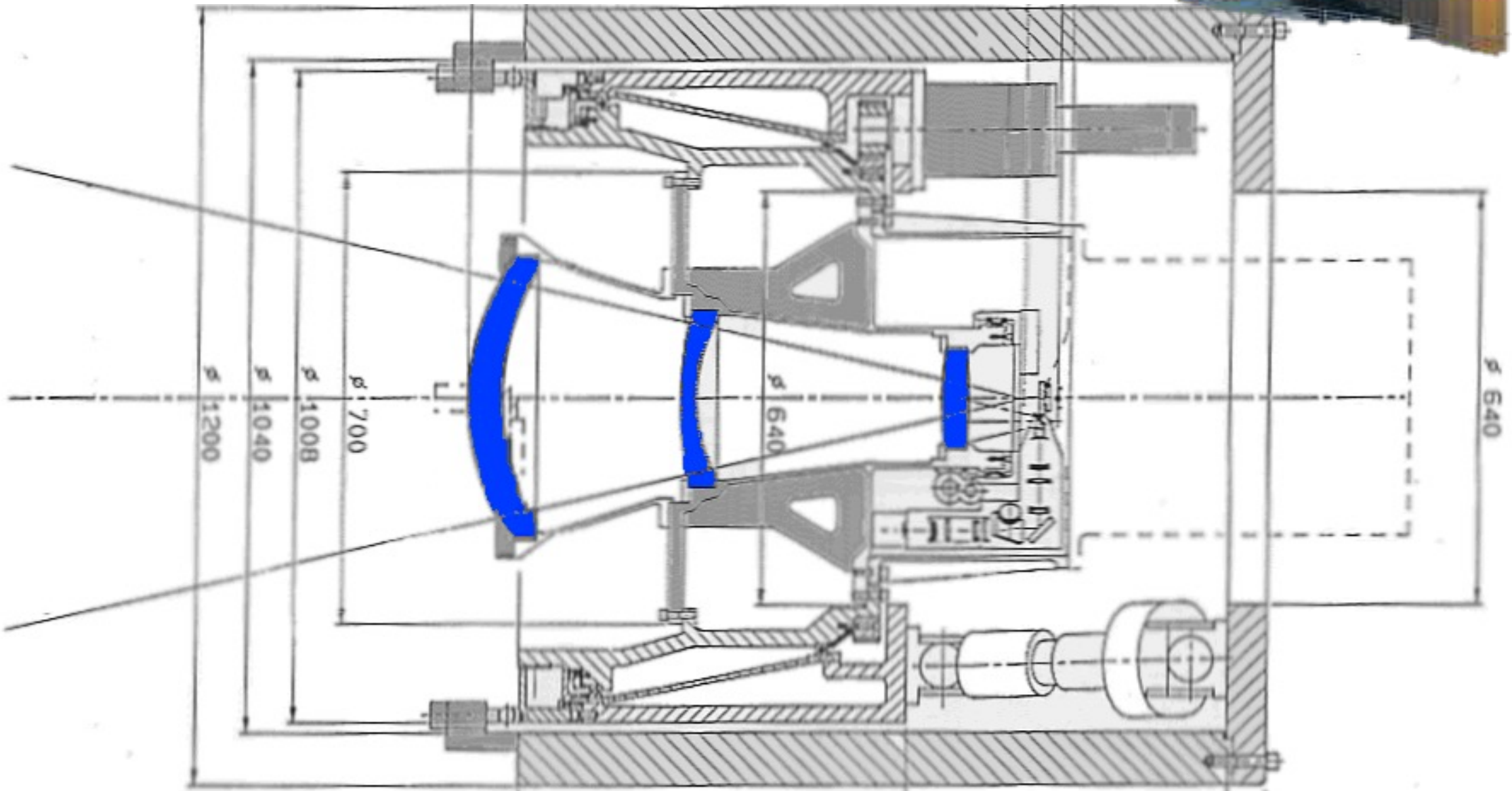

STUDY OF PRIME FOCUS CORRECTOR

P.Conconi[1] and R.Ragazzoni[2]

[1]Osservatorio Astronomico di Merate (Italy)

[2]Telescopio Nazionale Galileo, Padova (Italy)

#	R_m	K_m	d_m	$\varnothing_m$	R_{1f}	R_{1r}	t_1	$\varnothing_1$	d_{12}	R_{2f}	R_{2r}	t_2	$\varnothing_2$	d_{23}	R_{3f}	R_{3r}	t_3	$\varnothing_3$	d_{3F}	t_{fw}	Notes
1	10786	−1.0	4936.8	1820	194.74	225.86	18.67	202	161.87	389.43	137.13	4.23	130	208.36	240.78	−1708	14.74	105	88.72	13.0	Schott UBK7
2	15400	−1.0238	6759.5	3500	462.76	489.47	55.0	500	401.26	816.67	265.84	25.0	300	272.29	499.30	−1000	44	250	200.0	13.0	Schott UBK7
3	15400	−1.0238	6716.1	3500	500.46	539.17	85.56	530	355.07	795.18	301.83(1)	17.2	310	388.17	403.45(2)	∞	55.0	200	131.8	17.1	Fused Silica
4	19200	−1.0	8930.4	8000	334.42	328.15	80.0	540	252.26	616.89	168.78(3)	45.5	270	215.22	213.39(4)	−1262	20.0	150	69.0	9.0	Fused Silica

Table 1: Aspheric surfaces: (1): $A_4 = 7.88 \cdot 10^{-10}$, $A_6 = 1.22 \cdot 10^{-14}$; (2): $A_4 = 2.97 \cdot 10^{-9}$, $A_6 = 3.66 \cdot 10^{-14}$; (3): $A_4 = -4.608 \cdot 10^{-6}$, $A_6 = -3.782 \cdot 10^{-9}$, $A_8 = -9.609 \cdot 10^{-11}$; (4): $A_4 = -9.123 \cdot 10^{-6}$, $A_6 = -4.228 \cdot 10^{-8}$, $A_8 = 8.391 \cdot 10^{-10}$.

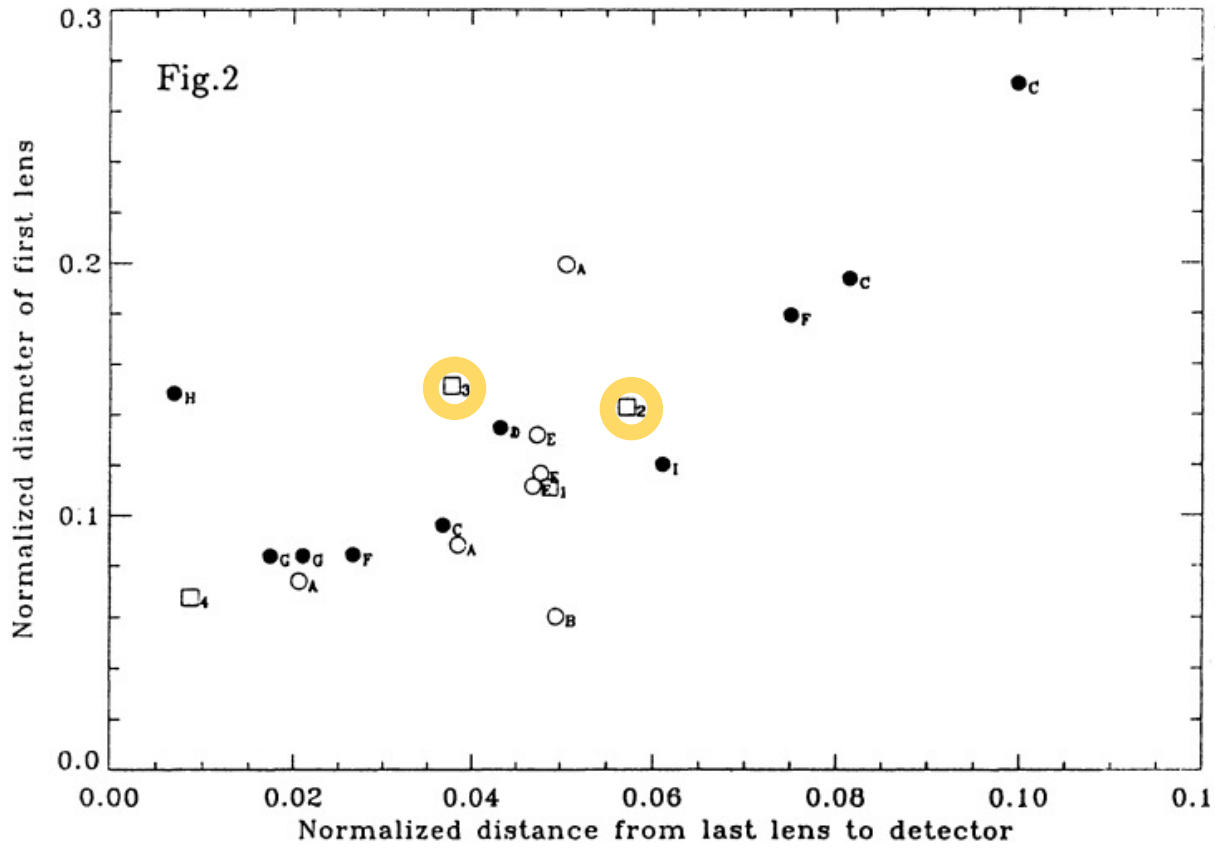

A C.G.Wynne "Ritchey-Chretien telescopes and extended field systems", *Ap.J.* (1968) **152** 675;

B C.G.Wynne "Improved three-lens field correctors for paraboloids", *M.N.R.a.S.* (1972) **160** 13P;

C C.G.Wynne "Data for some four-lens paraboloid field correctors", *N.N.R.a.S.* (1973) **165** 1P;

D M.Faulde and R.N.Wilson "A three-lens prime focus corrector for parabolic telescope mirrors", *A&A* (1973) **26** 11;

E C.G.Wynne "A new wide-field triple lens paraboloid field corrector", *M.N.R.a.S.* (1974) **167** 189;

F E.H.Richardson, C.F.W.Harmer and W.A.Grundman "Better but bigger prime focus corrector lenses for Ritchey-Chretien telescopes", *M.N.R.a.S.* (1984) **206** 47;

G H.W.Epps, J.R.P.Angel and E.Anderson "Advanced wide-field broad-passband refracting field correctors for large telescopes", *IAU coll.***79** (1984);

H E.H.Richardson and C.L.Morbey "Refractive vs. reflective correctors", *IAU coll.***79** (1984);

I C.Cao and R.N.Wilson "An improved prime focus corrector for F/3 true or quasi Ritchey-Chretien primary", *A&A* (1984) **133** 37;

J A.Magnani, S.Pieri and A.Romoli "Wide spectral range F/2.3 prime focus spherical corrector for 3.5m Ritchey-Chretien telescope" (1989) SPIE **1130** 68.

Table 2: References used in Fig.2 for the Prime Focus correctors found in the literature.

A NIR Prime Focus for the TNG as well

Preliminary design of a NIR prime focus corrector for the Galileo Telescope

Claudio Pernechele[a], Favio Bortoletto[a,b], Paolo Conconi[c], Daniele Gardiol[b], Emilio Molinari[c], Filippo Zerbi[c]

[a]Osservatorio Astronomico di Padova, vicolo dell'osservatorio 5, I-35100 Padova – Italy.

[b]Centro Galileo Galilei, Apartado de Correos 565, E-38700 S.ta Cruz de La Palma – Spain.

[c]Osservatorio Astronomico di Milano, via Bianchi 46, I-22055 Merate – Italy.

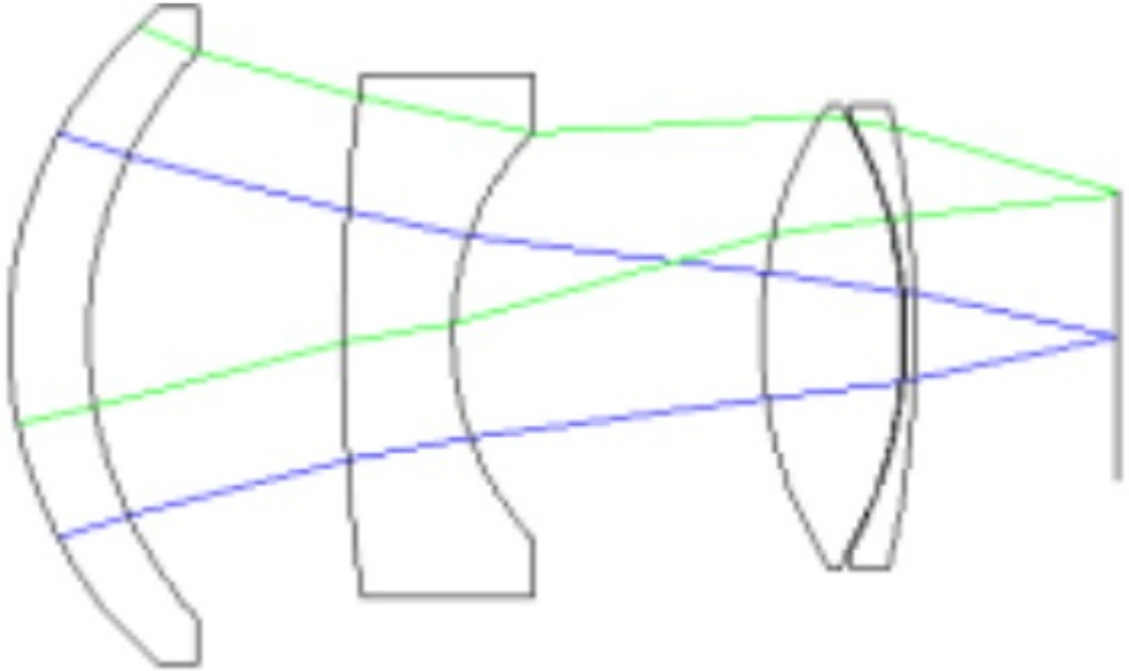

Fig 2: Optical layout for the 4 x 2k x 2k mosaic option.

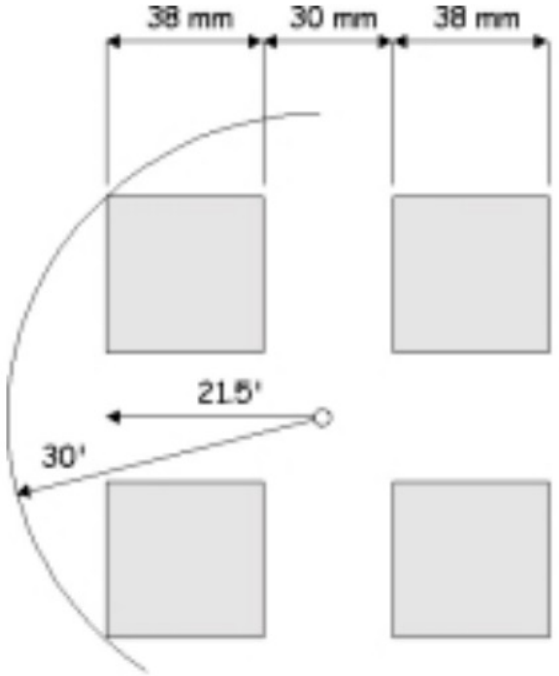

Fig. 1: A possible design for 4 chips 2k x 2k mosaic.

The TNG heritage…

- No Prime Focus have ever seen the light at TNG
- But the studies and analyses found their way at LBT in the pair of LBCs
- Still today the two wide field cameras are the most science productive instruments aboard the LBT telescope

Elise Viard-Vernet

Giorgia Gentile

A new train of optics

The NTT design

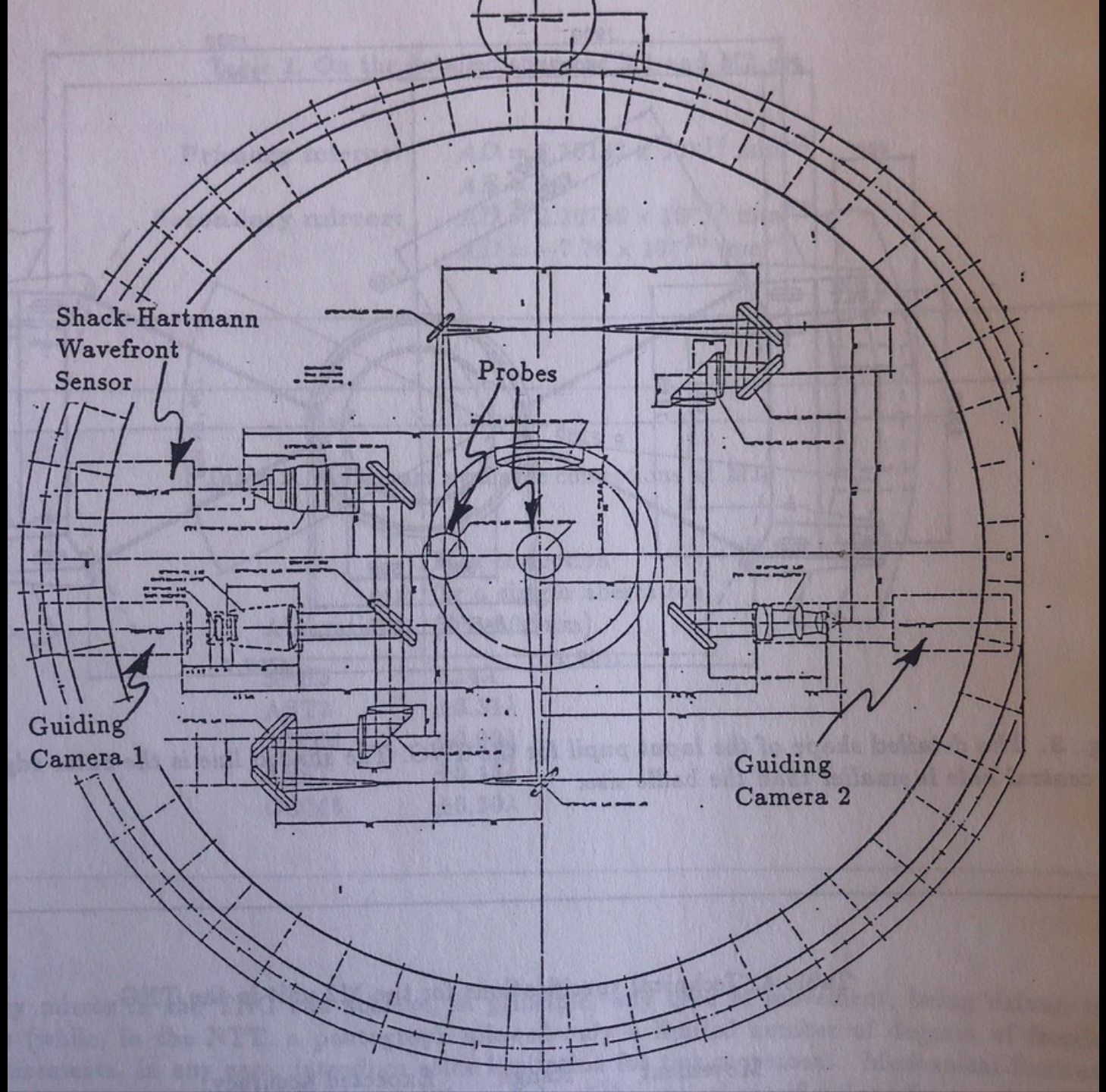

The TNG one...!

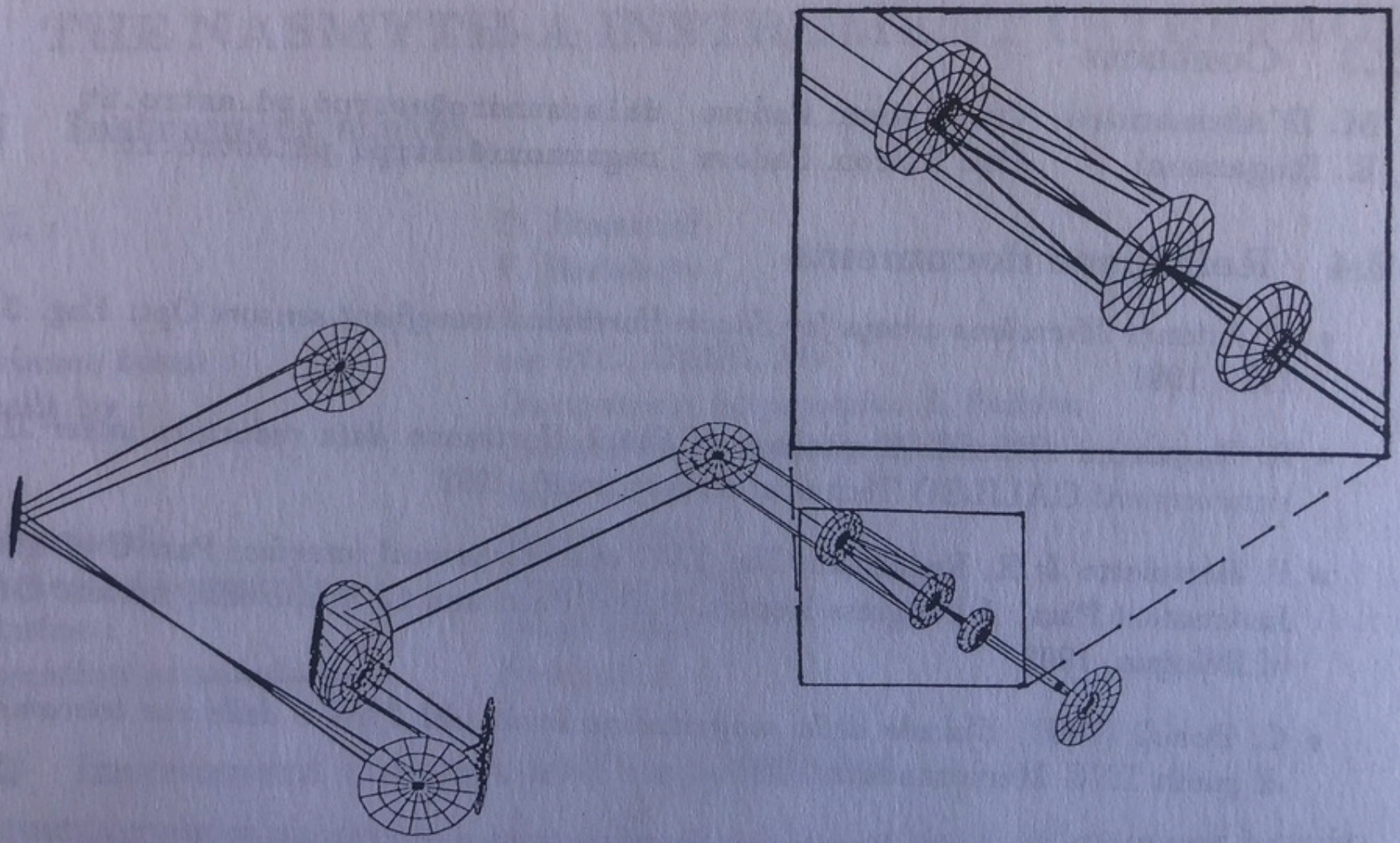

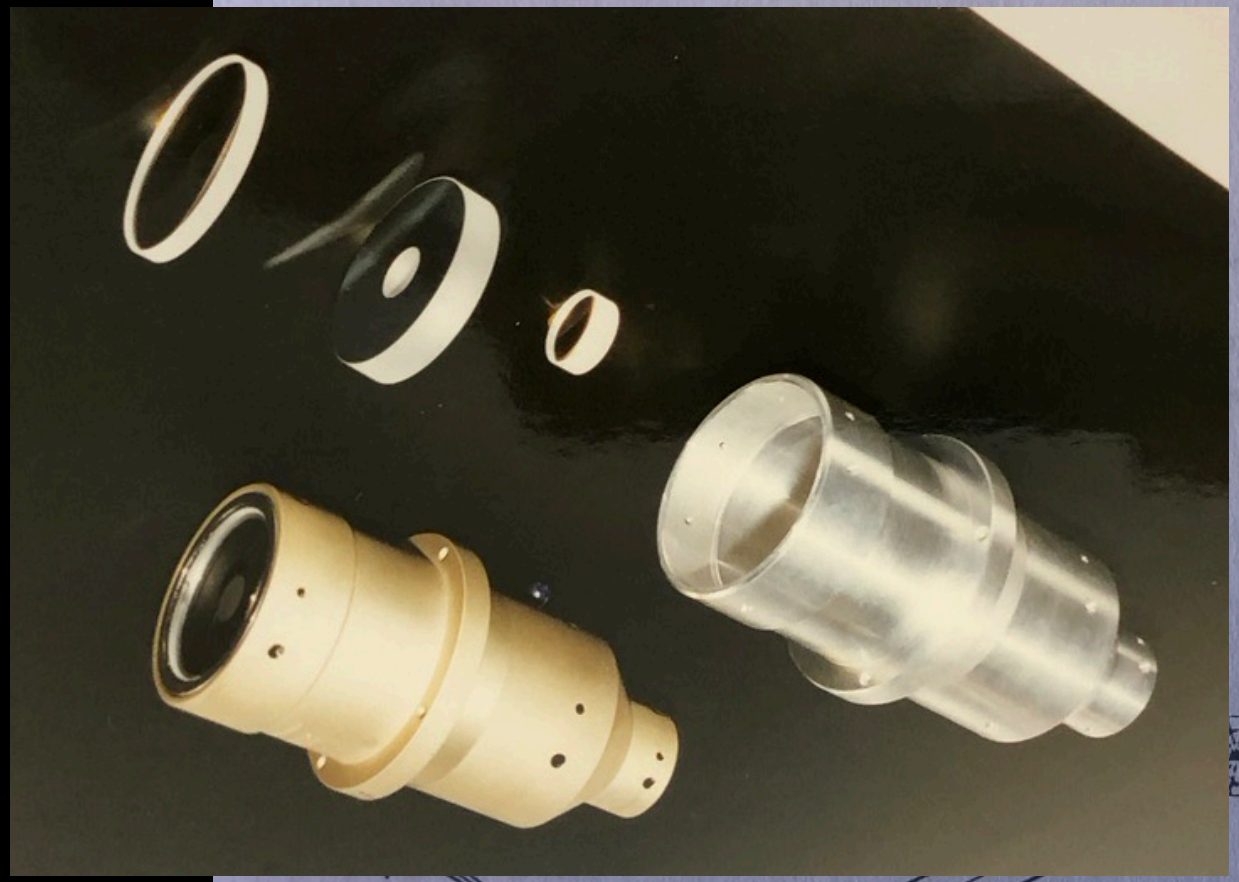

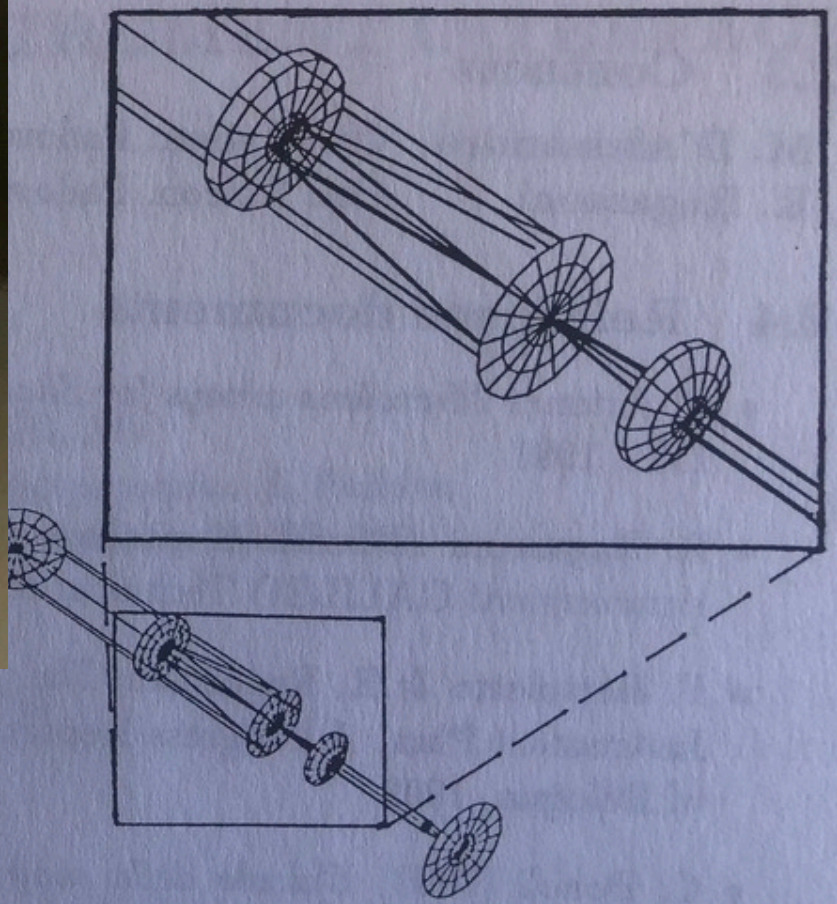

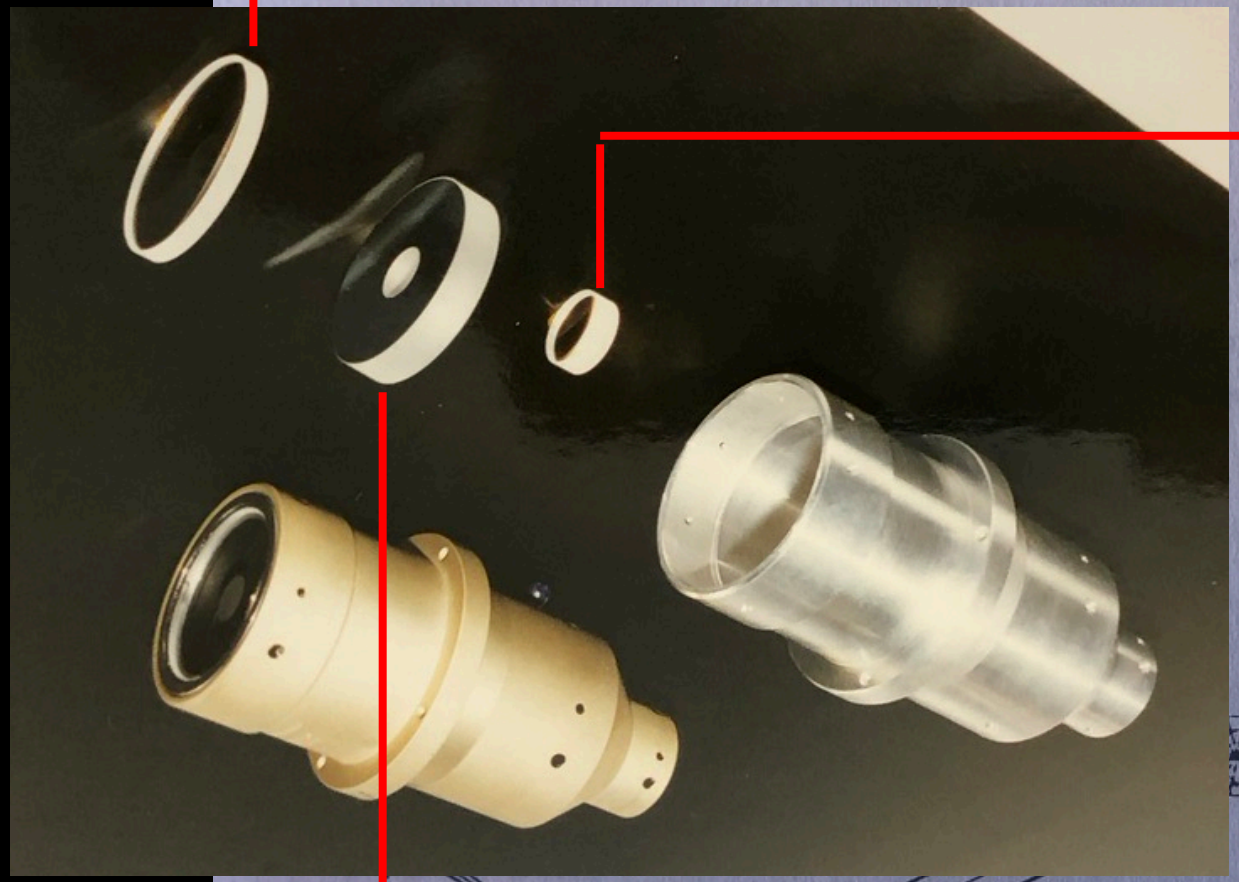

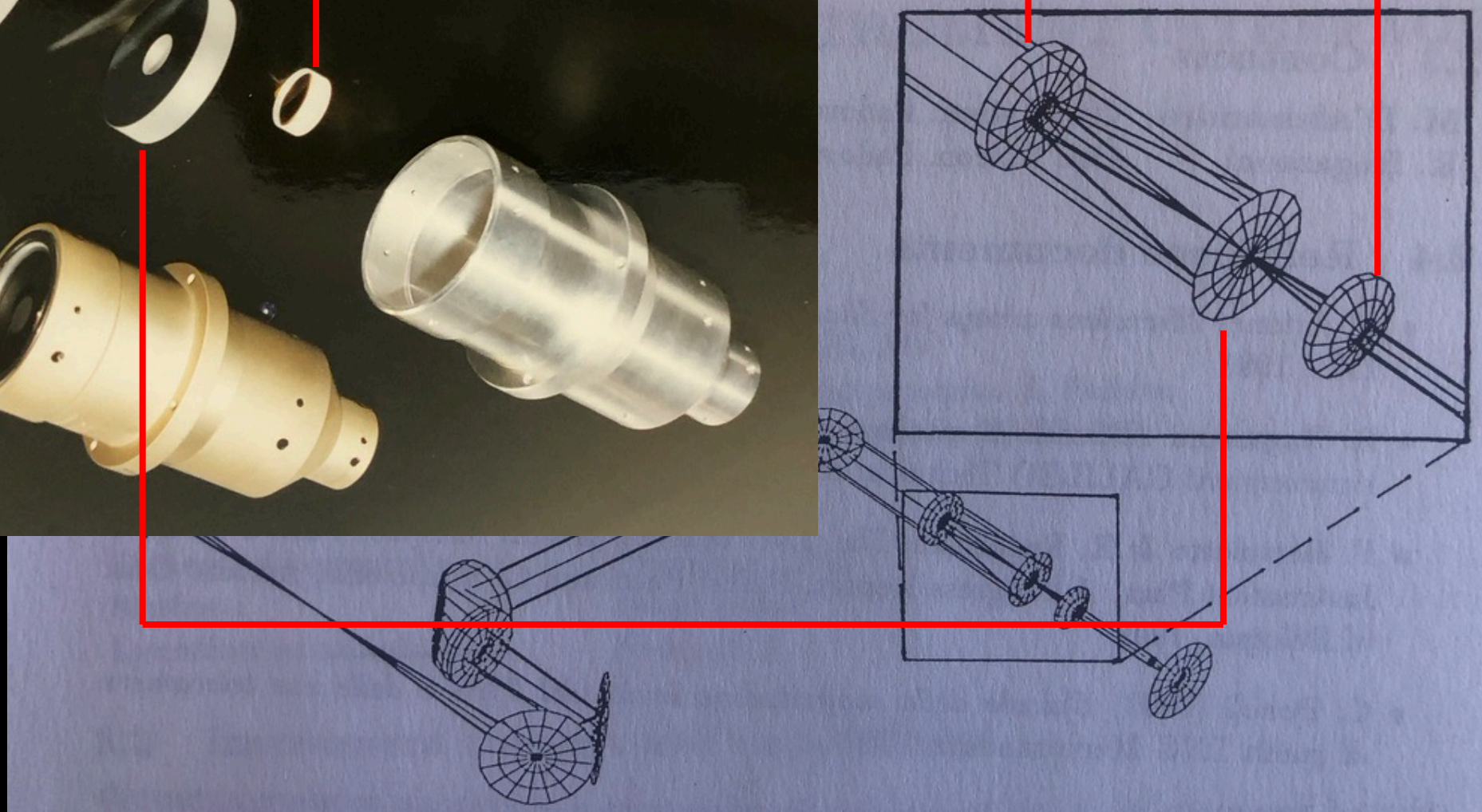

Do you remember? With style...!

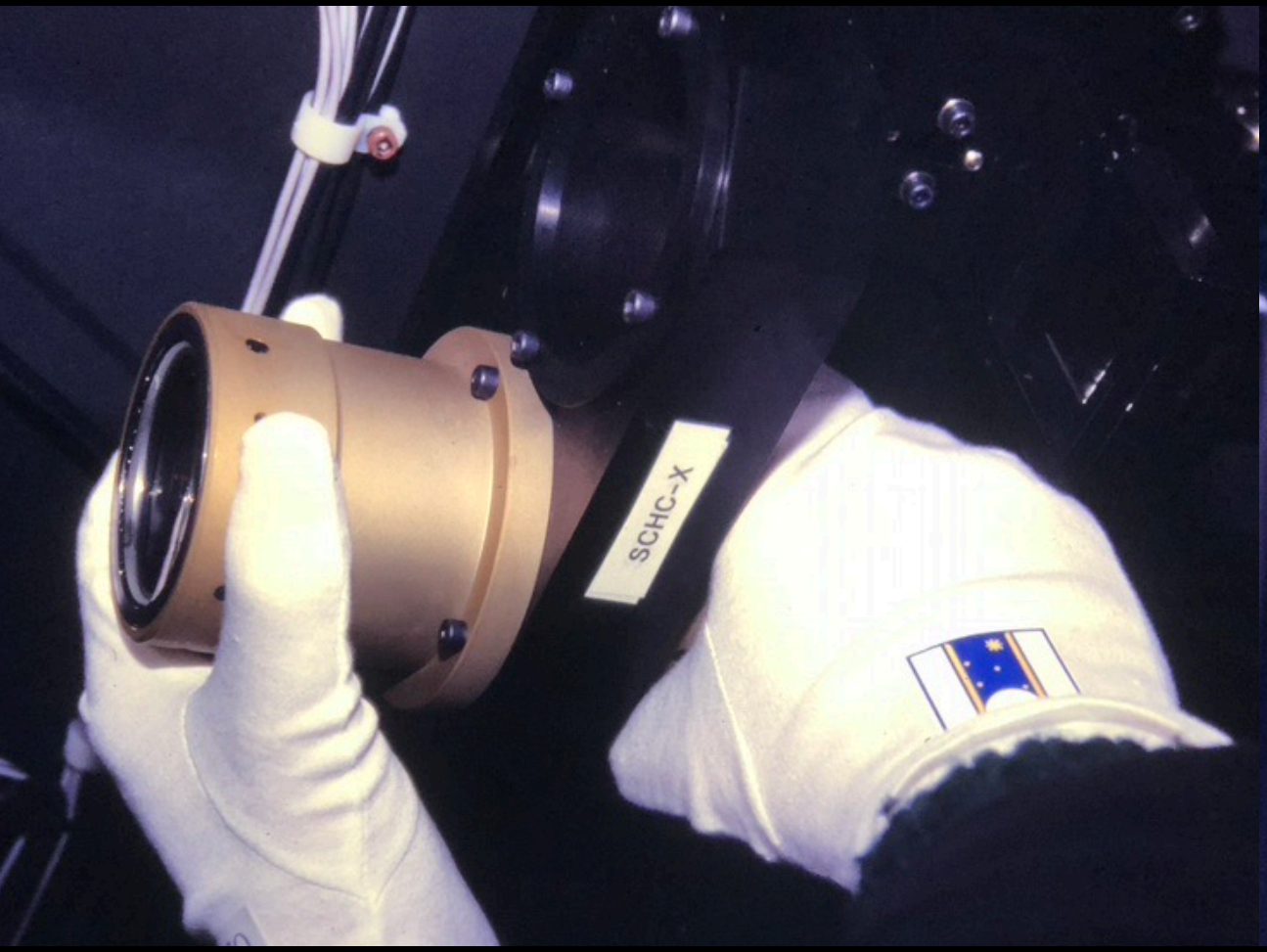

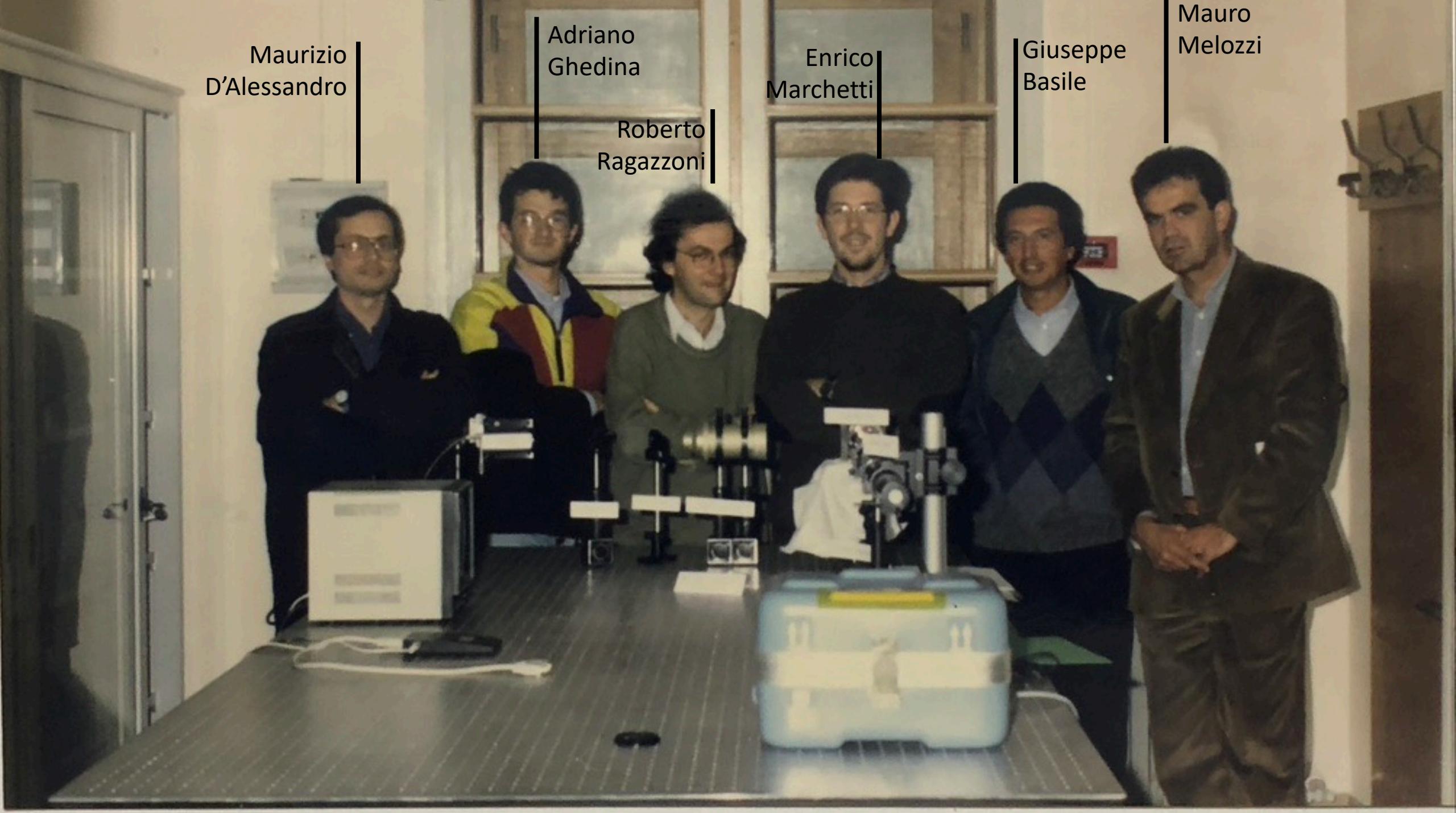
Maurizio D'Alessandro
Adriano Ghedina
Roberto Ragazzoni
Enrico Marchetti
Giuseppe Basile
Mauro Melozzi

How to glue mirror

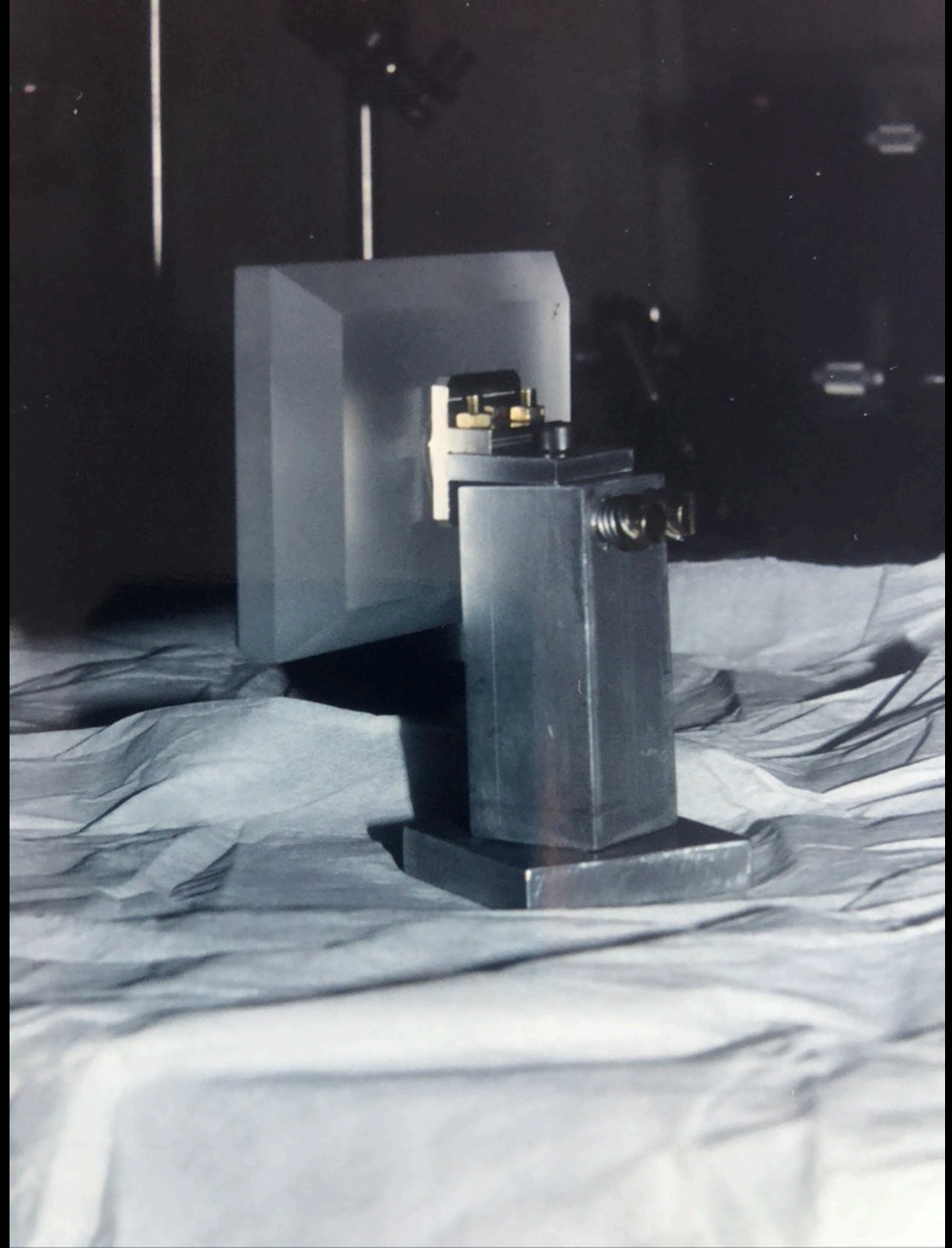

How to glue mirror

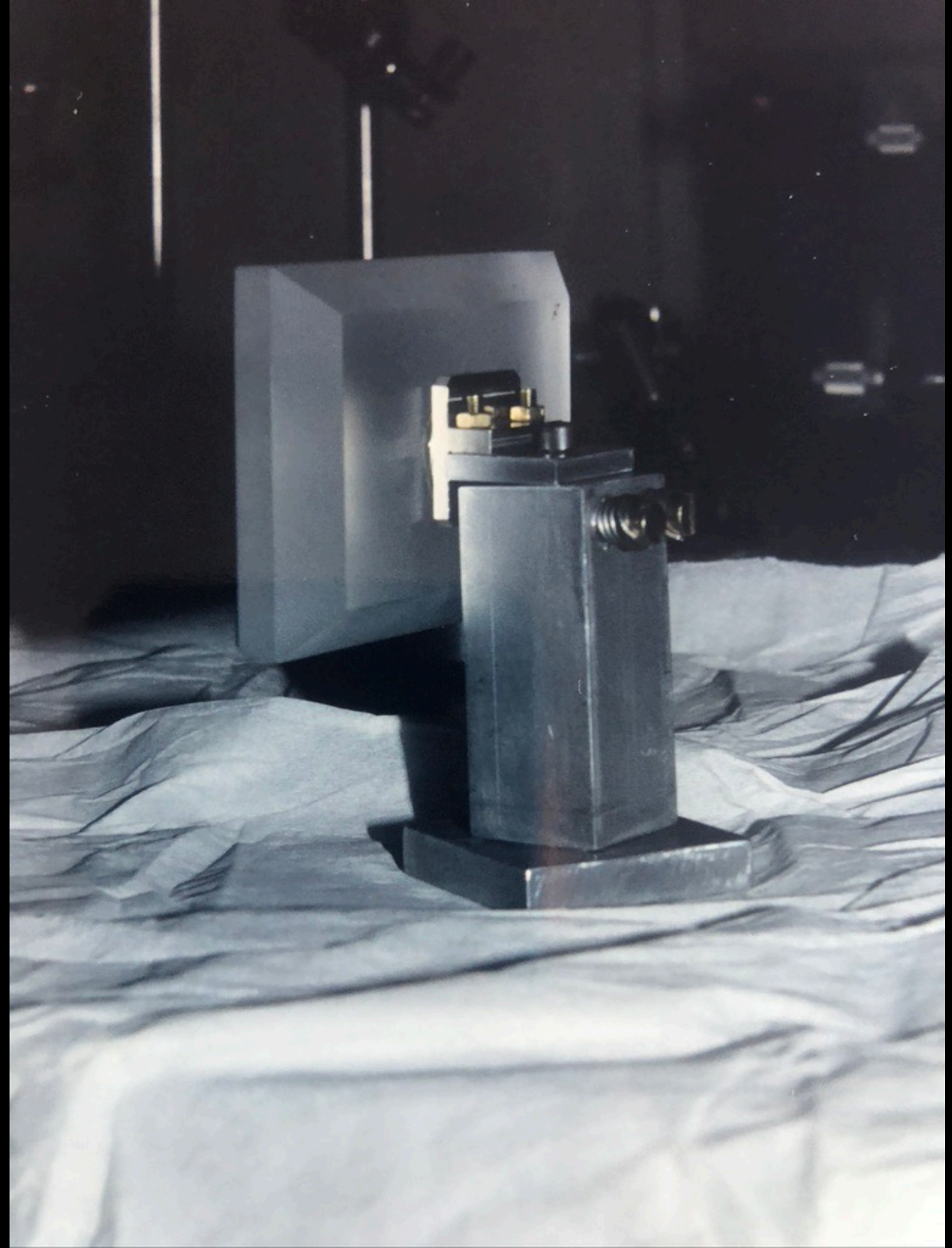

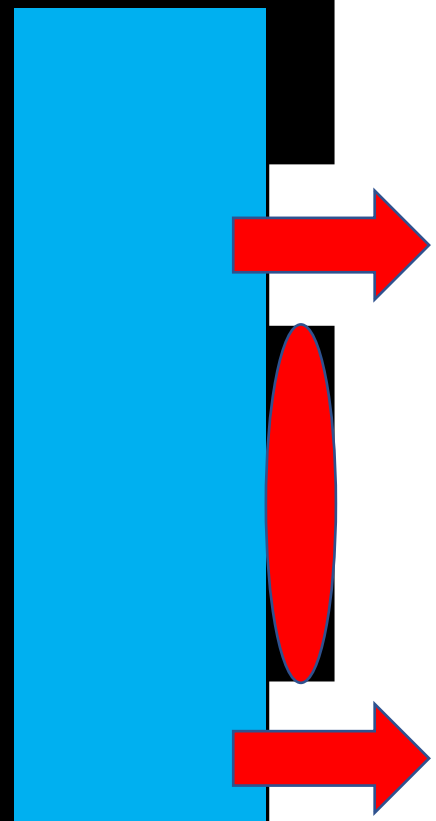

Mauro Melozzi

Paolo Conconi

Giuseppe Basile

Walter Gallieni

Enrico Marchetti

Roberto Ragazzoni

Giuseppe Basile

Walter Gallieni

???? ????

Roberto Ragazzoni

Active Optics

Disclaimer

- Active Optics has been the first really new and modern branch of optics that we have been faced to…
- It requires to look the problem on what for most of us was a new approach, forcing us to study control theory and to understand things like the Laplace transform…
- We basically entered into this new arena with the modesty of taking the energies to absorbs from our ESO teachers (Lothar Noethe in primis)…
- And then we attacked it with the more modern approaches of multiple and parallel computing that at the time were on their initial phase of development…

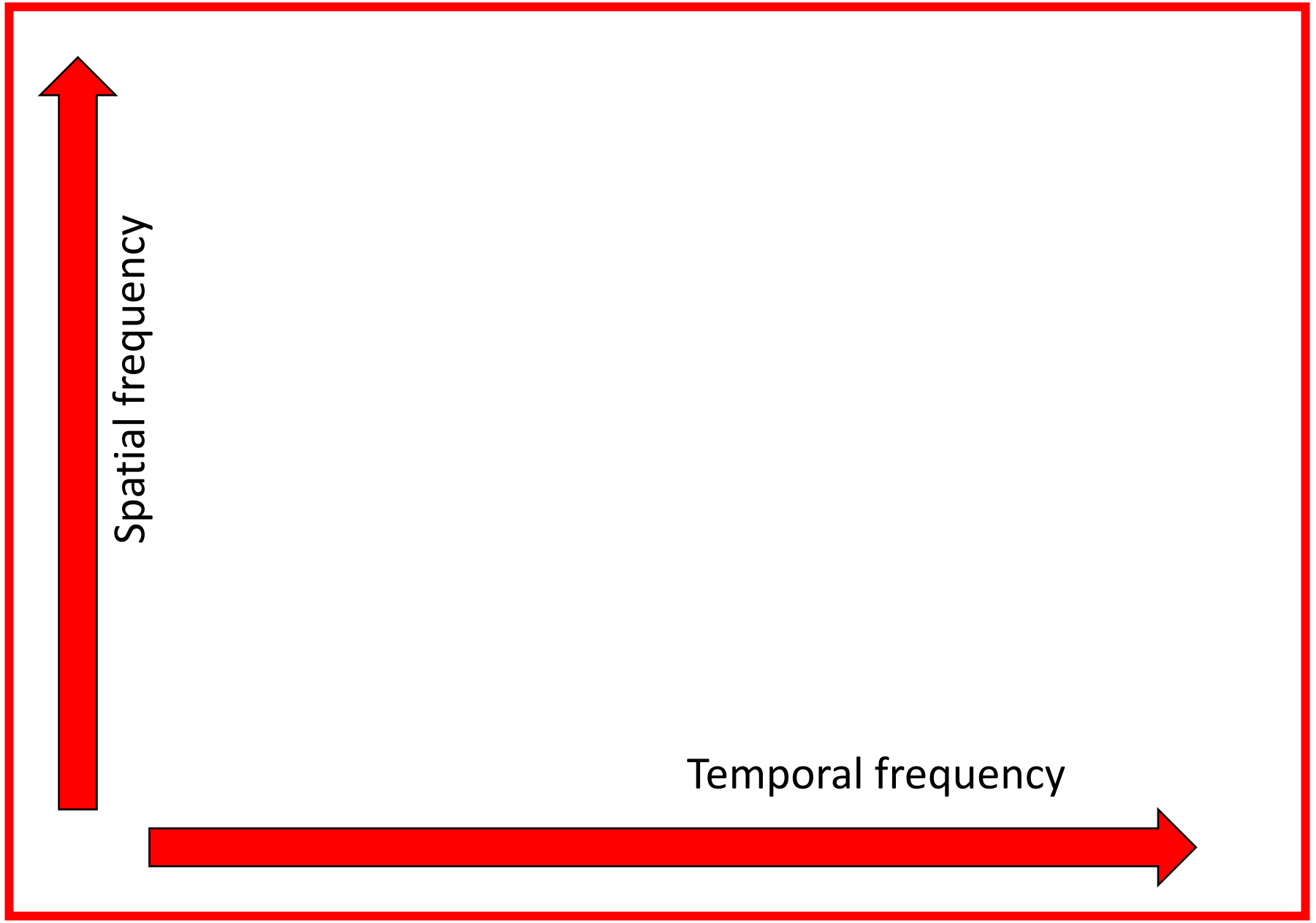
Spatial frequency
Temporal frequency

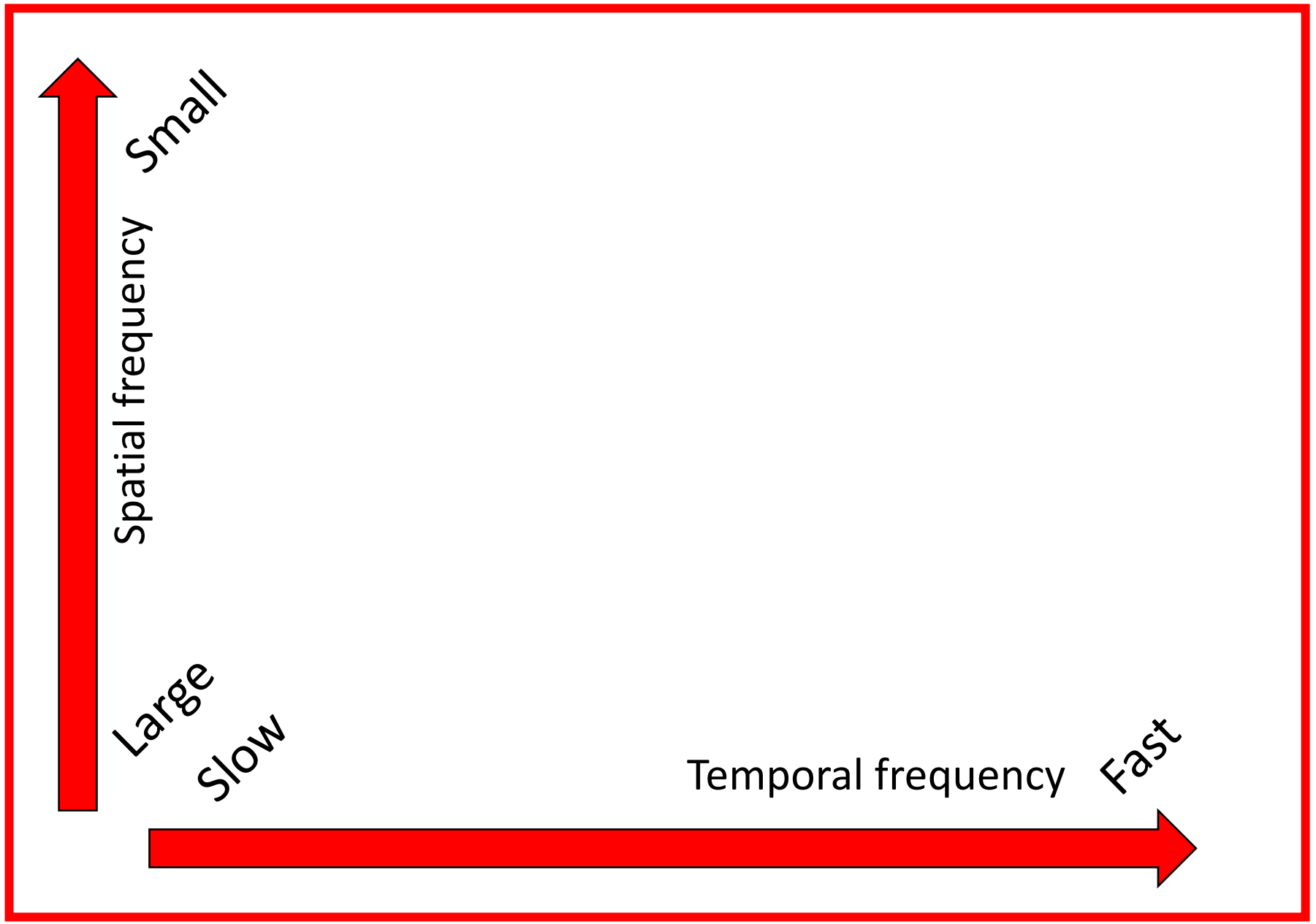
Small
Spatial frequency
Large
Slow
Temporal frequency
Fast

Causes....

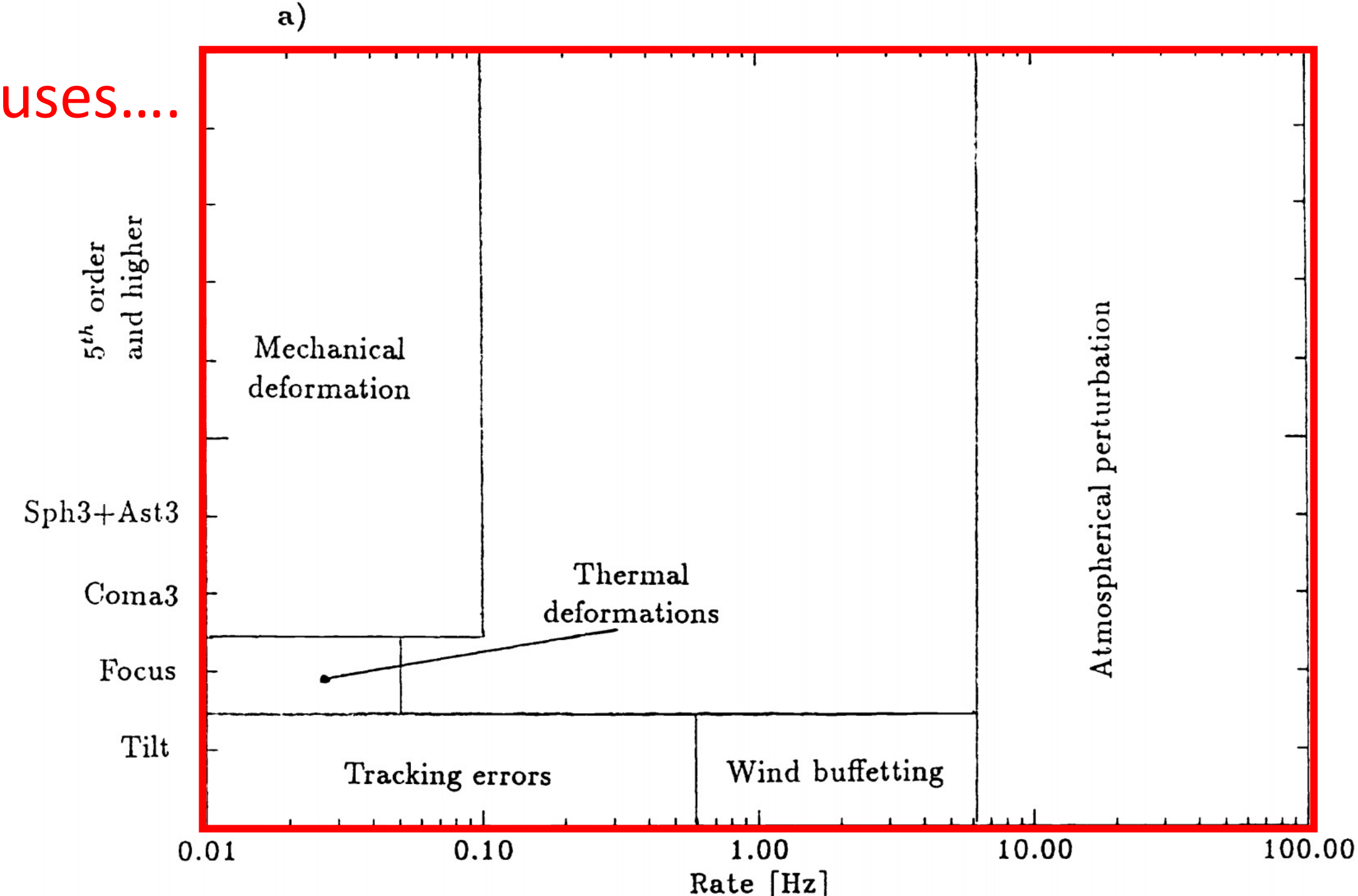
a)
5th order and higher
Sph3+Ast3
Coma3
Focus
Tilt
Mechanical deformation
Thermal deformations
Tracking errors
Wind buffetting
Atmospherical perturbation
0.01
0.10
1.00
10.00
100.00
Rate [Hz]

Remedies....

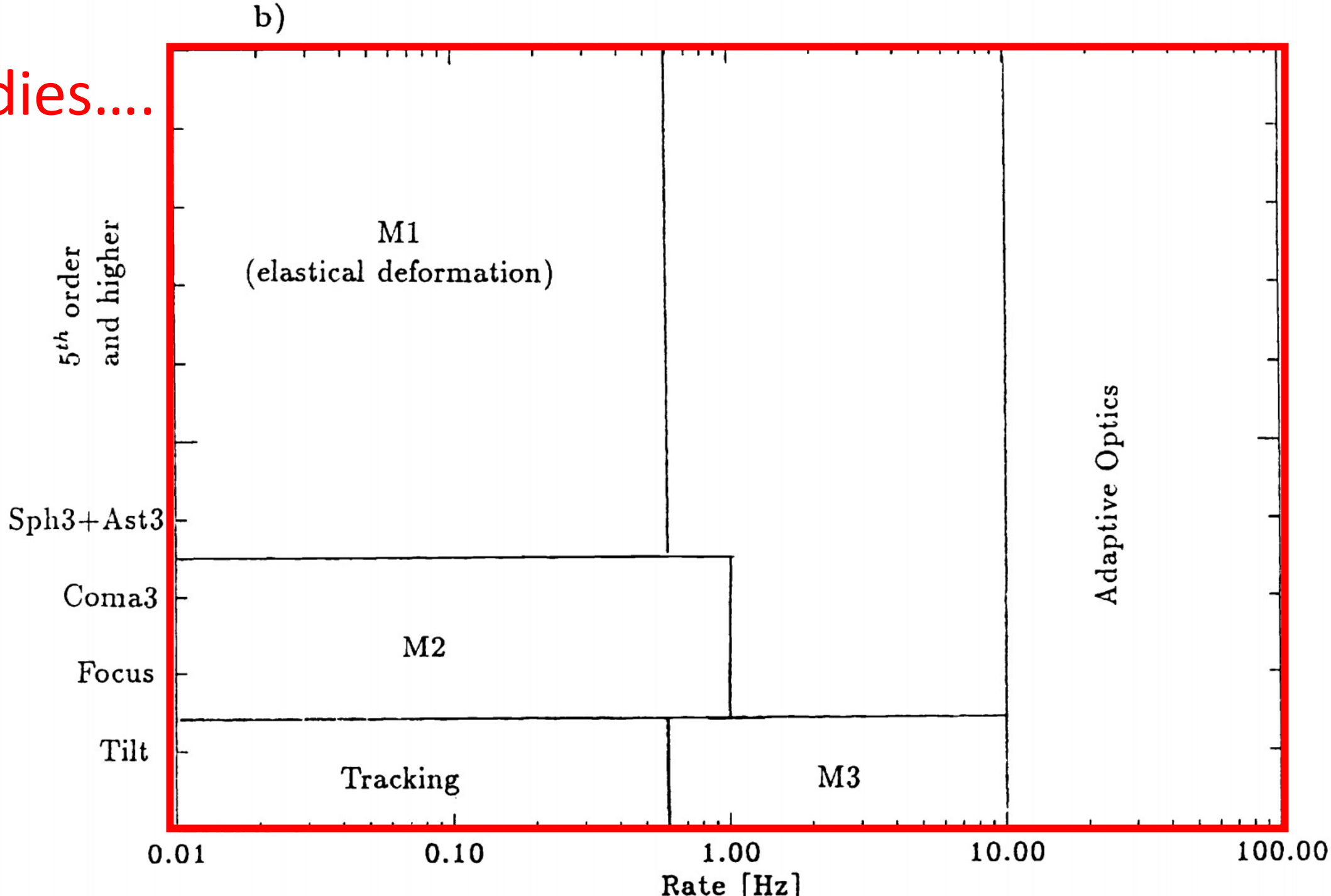
b)
M1
(elastical deformation)
5th order
and higher
Sph3+Ast3
Coma3
Focus
Tilt
M2
Tracking
M3
Adaptive Optics
0.01
0.10
1.00
10.00
100.00
Rate [Hz]

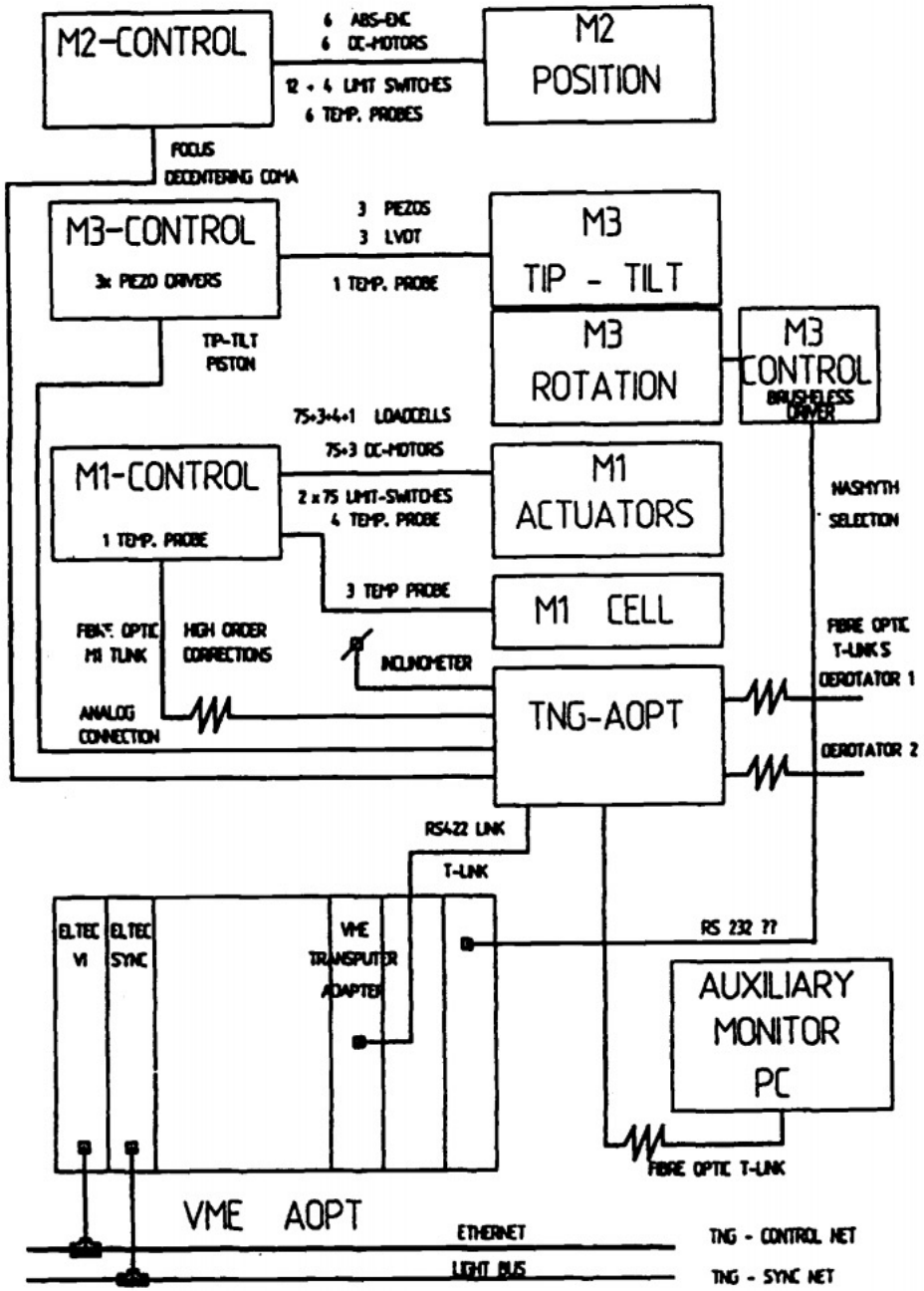

Figure 8. The active optics control system and communication network.

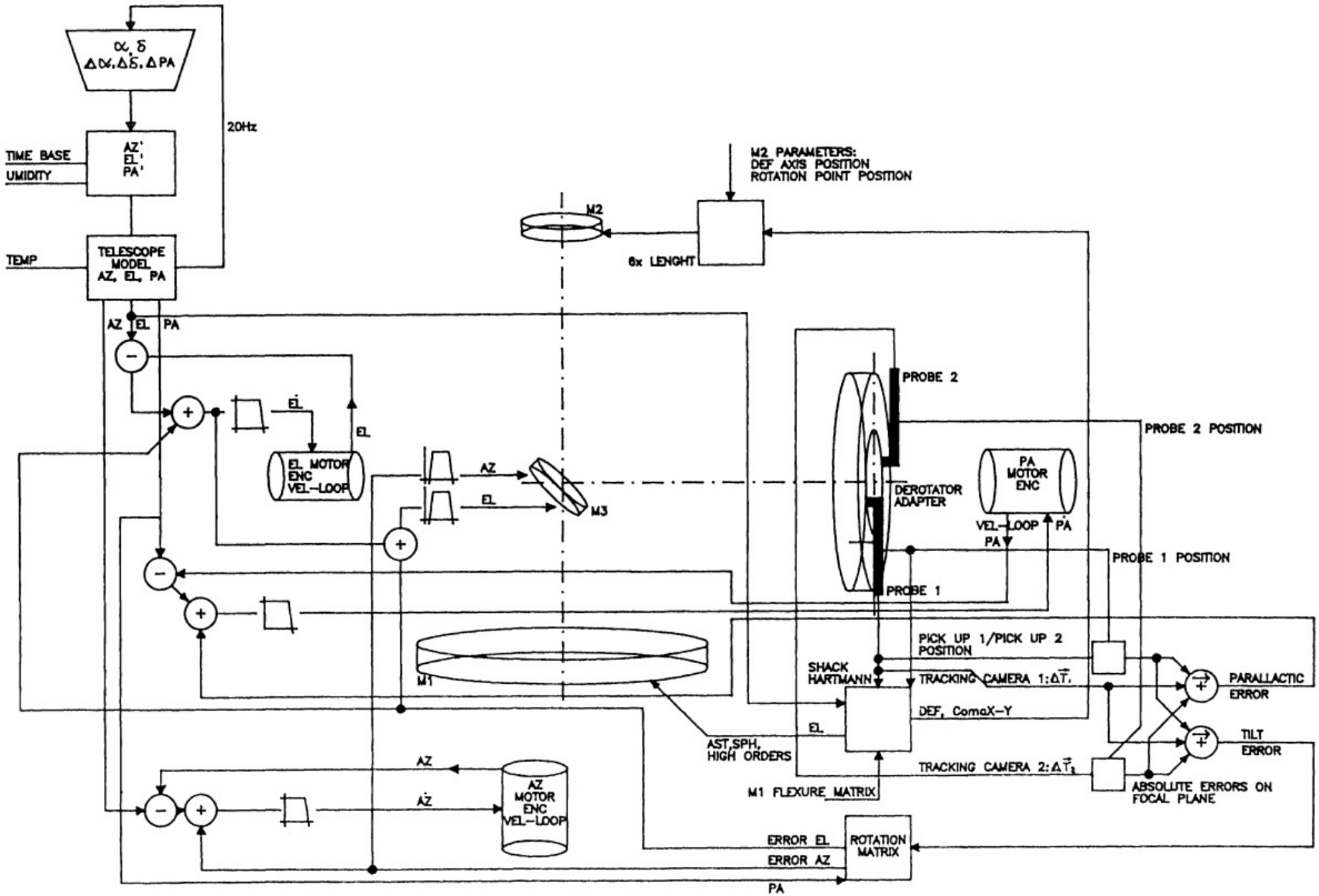

Figure 1: The overall layout of the control-loops for the TNG.

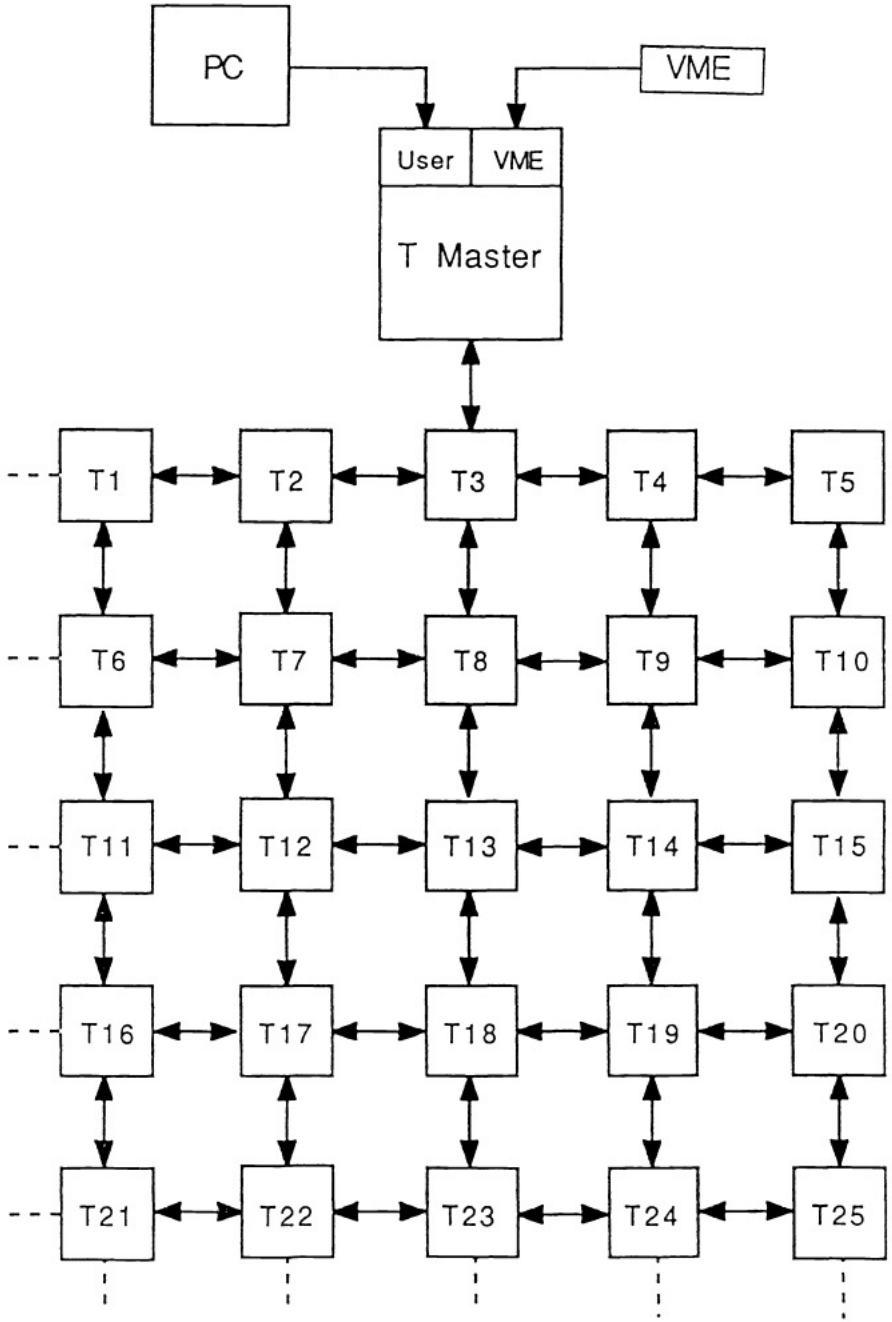

Figure 3: A possible interconnetion layout for M1 transputer system.

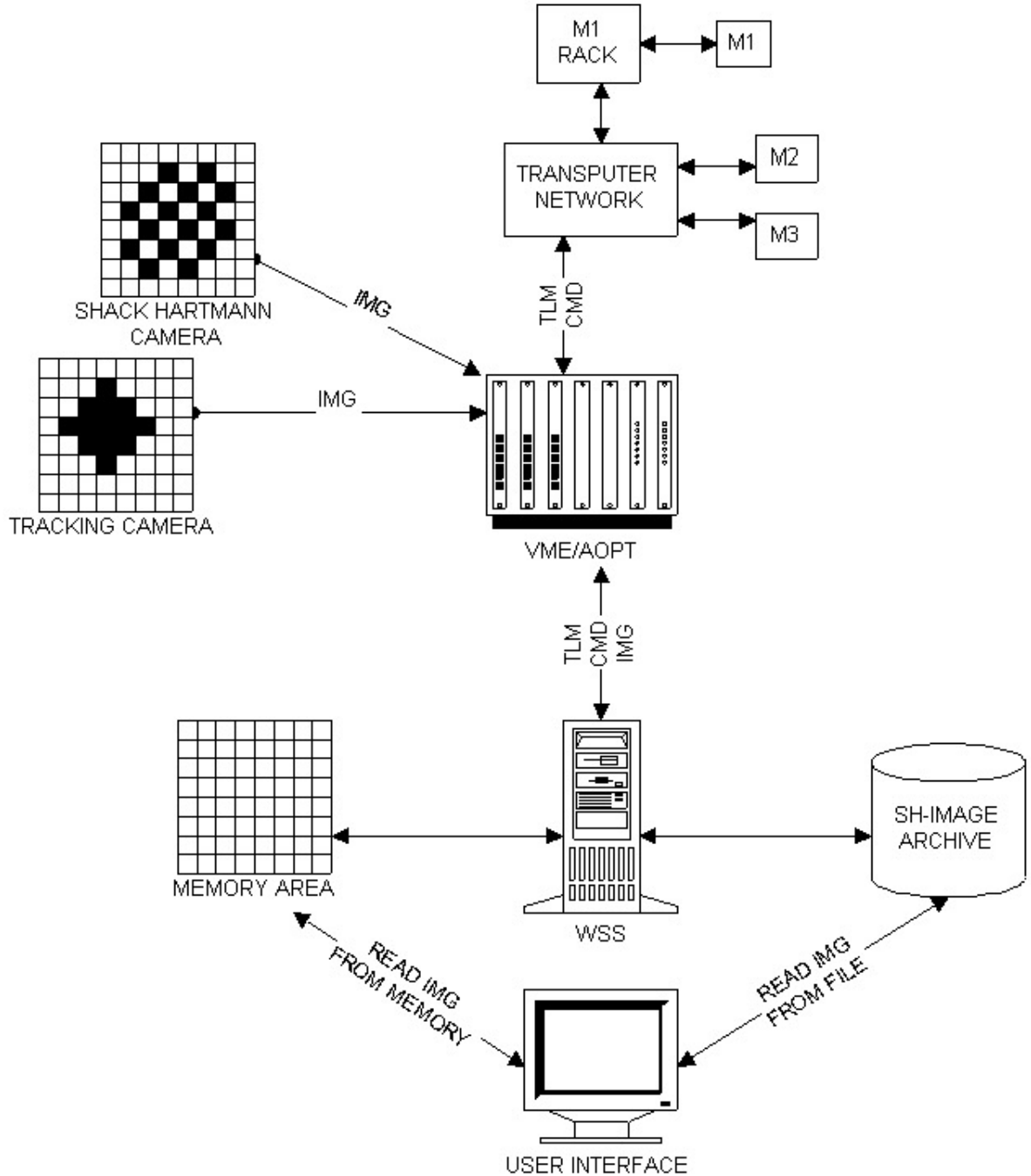

Roberto
Ragazzoni
??? (Sardone??)
Eugenio
Buischio

Fabio Bortoletto
Ernst Dieter Knohl
Cesare Barbieri
Roberto Ragazzoni

Active Optics at Zeiss: M1 on the TNG cell

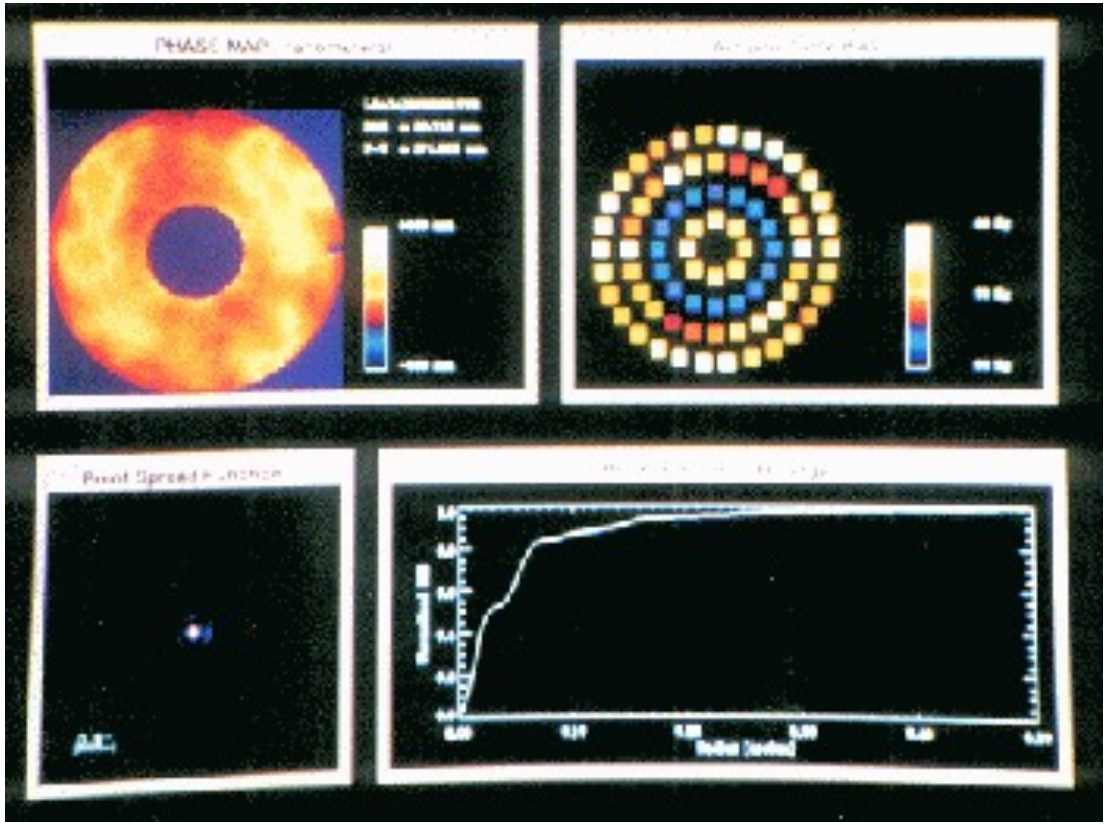

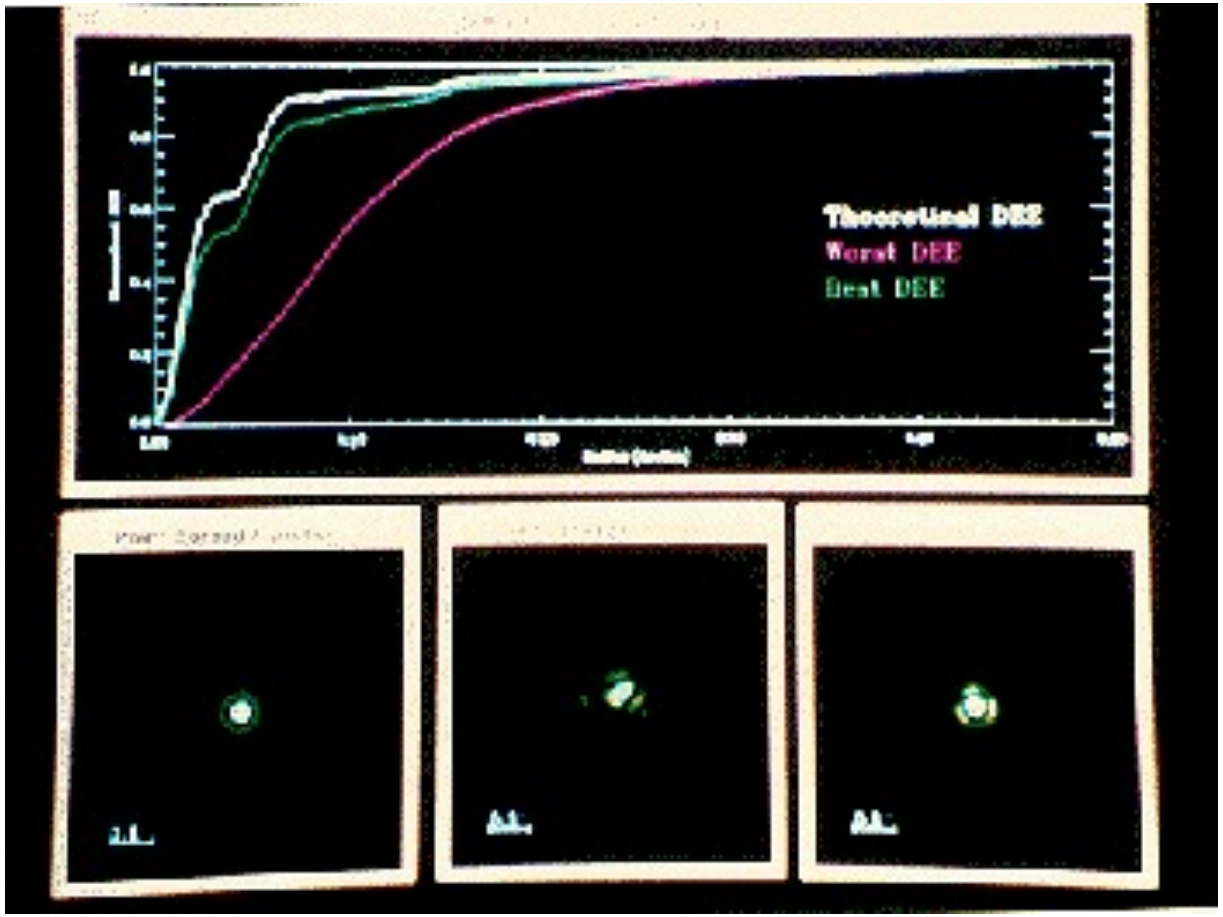

Formal contractual acceptance of Mirrors: February 1993

(see TNG ***Newsletter*** nr. 4, April 1993)

Aligning the baby

Aligning the baby

- Basically you have to measure how much, in angle and displacement, in 3D, the axis are not in their nominal position…
- Acting on the (heavy) optical and mechanical components to minimize such departure…
- Keeping these figures for the pointing model…

- It is a combination of fine optical measurements and movement of really heavy (and fragile) pieces

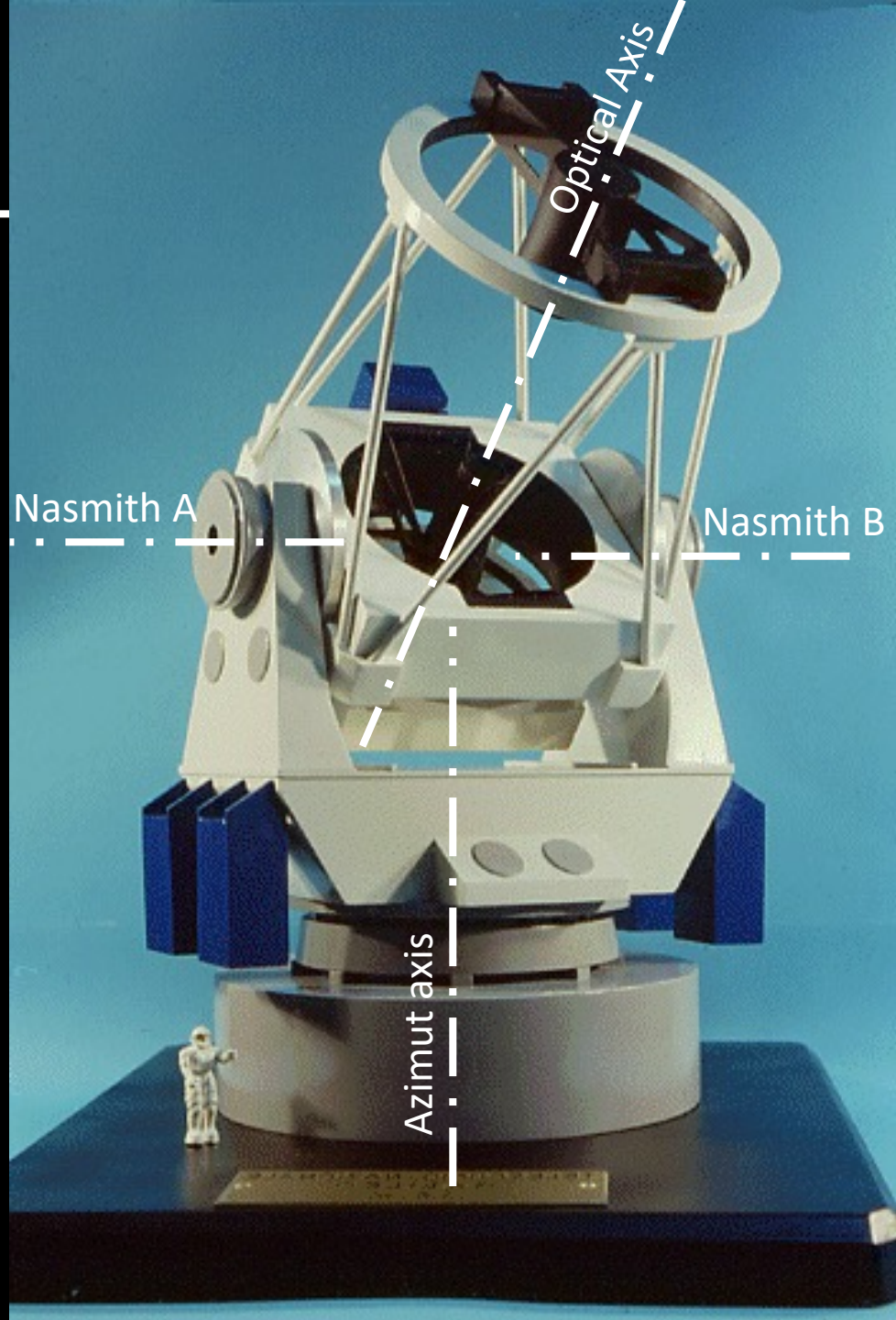

Aligning the baby

- Dozens of stories…
- All the light for the Azimut has to go through a tiny aperture iun the rotating joint
- Measurements inside the Azimuth box were made (mostly by myself and Fabio Bortoletto) lying over the cooling pipes leading to freezing in the meantime…
- I regret not having a picture with Francis Franza at ESO that spelled us so much tricks and hidden stories

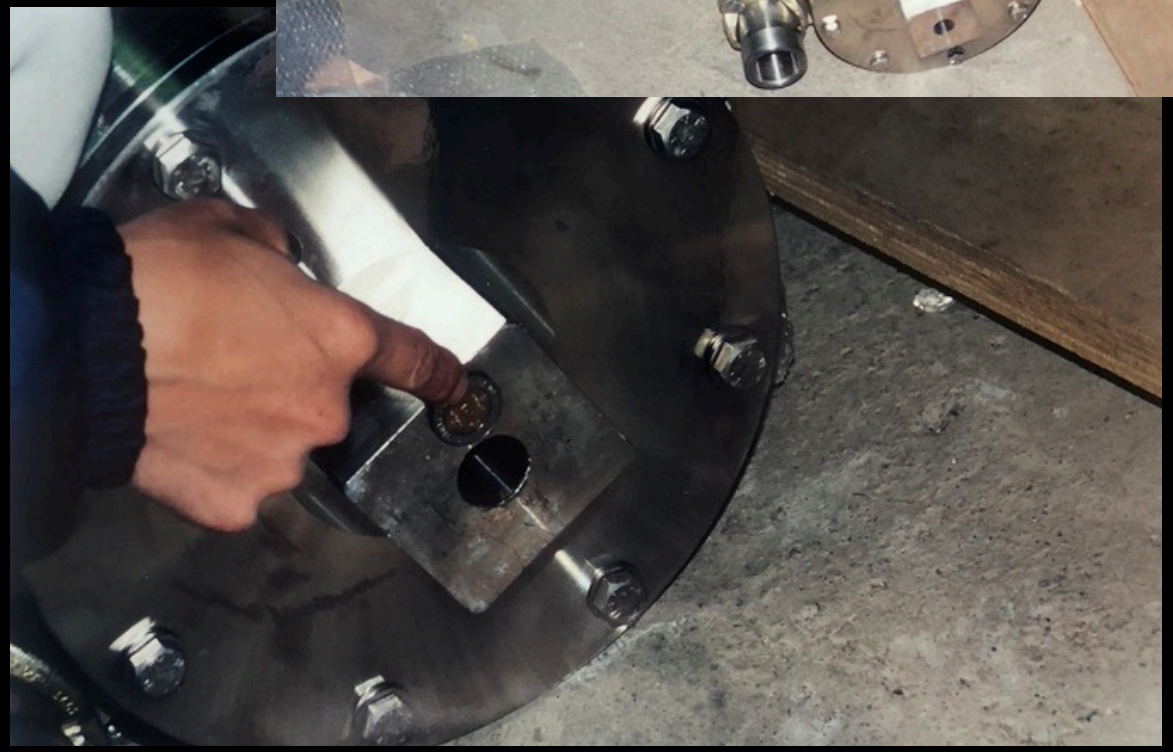

Aligning the baby

- Dozens of stories…
- All the light for the Azimut has to go through a tiny aperture iun the rotating joint
- Measurements inside the Azimuth box were made (mostly by myself and Fabio Bortoletto) lying over the cooling pipes leading to freezing in the meantime…
- I regret non having a picture with Francis Franza at ESO that spelled us so much tricks and hidden stories

Aligning the baby

- Dozens of stories…
- All the light for the Azimut has to go through a tiny aperture iun the rotating joint
- Measurements inside the Azimuth box were made (mostly by myself and Fabio Bortoletto) lying over the cooling pipes leading to freezing in the meantime…
- I regret non having a picture with Francis Franza at ESO that spelled us so much tricks and hidden stories

Six legs for a mirror

Neutral points

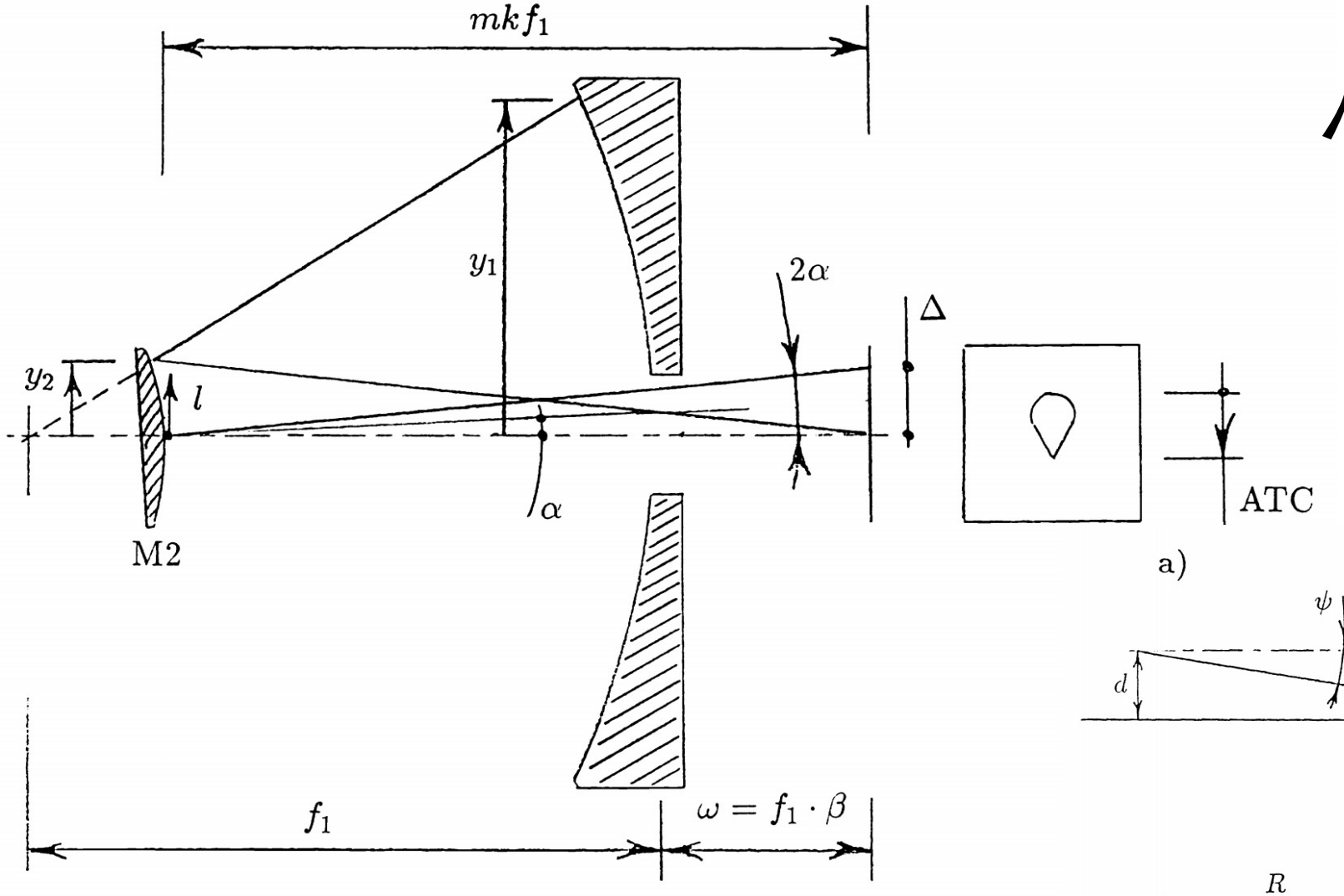

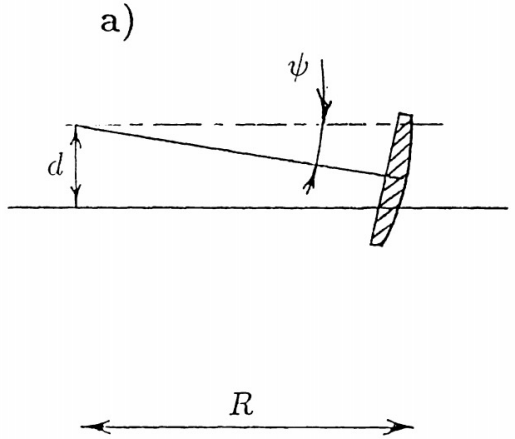

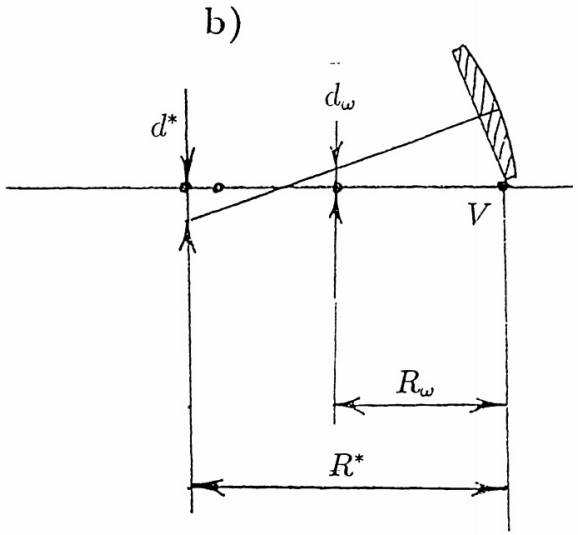

Figure 3: **a**: any rotation around a point displaced d from the optical axis is determined by the parameter ψ; **b**: decentering coma and third-order offset depend upon d^* and d_ω respectively.

Neutral points

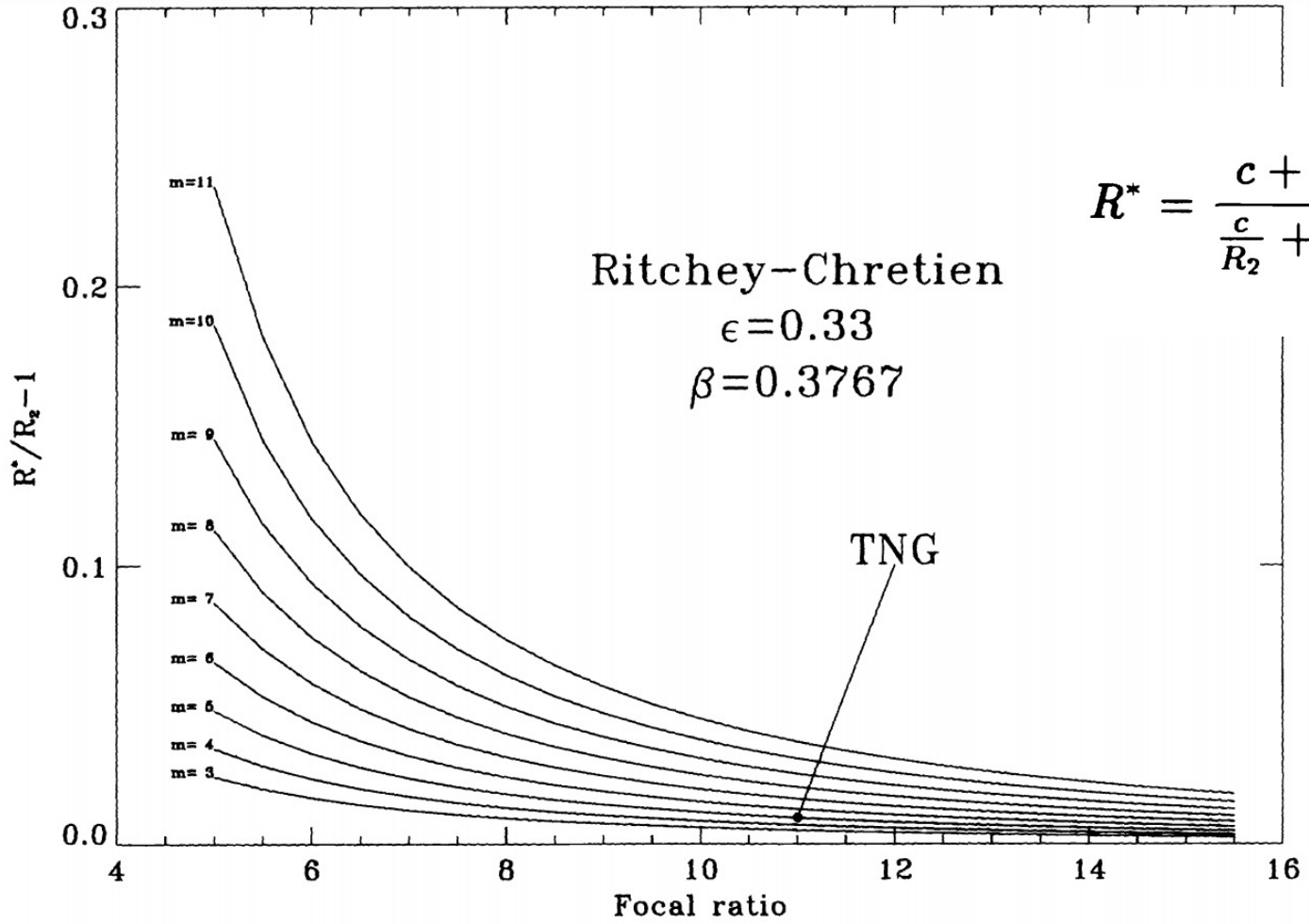

$$R^* = \frac{c + q\gamma}{\frac{c}{R_2} + \frac{q\gamma}{R_\omega}} = R_2 \cdot \frac{1 - \frac{(m-1)(m+1)}{32F^2}\left(\frac{1-\epsilon^2}{1-\epsilon^4}\right)}{1 - \frac{(m-1)(m+1)}{32F^2}\left(\frac{1-\epsilon^2}{1-\epsilon^4}\right)\left[1 - K_2\left(\frac{m-1}{m+1}\right)\right]}$$

Figure 4: Differences of R^* in respect to R_2 for a class of Ritchey-Chretien telescopes.

From drawings to reality

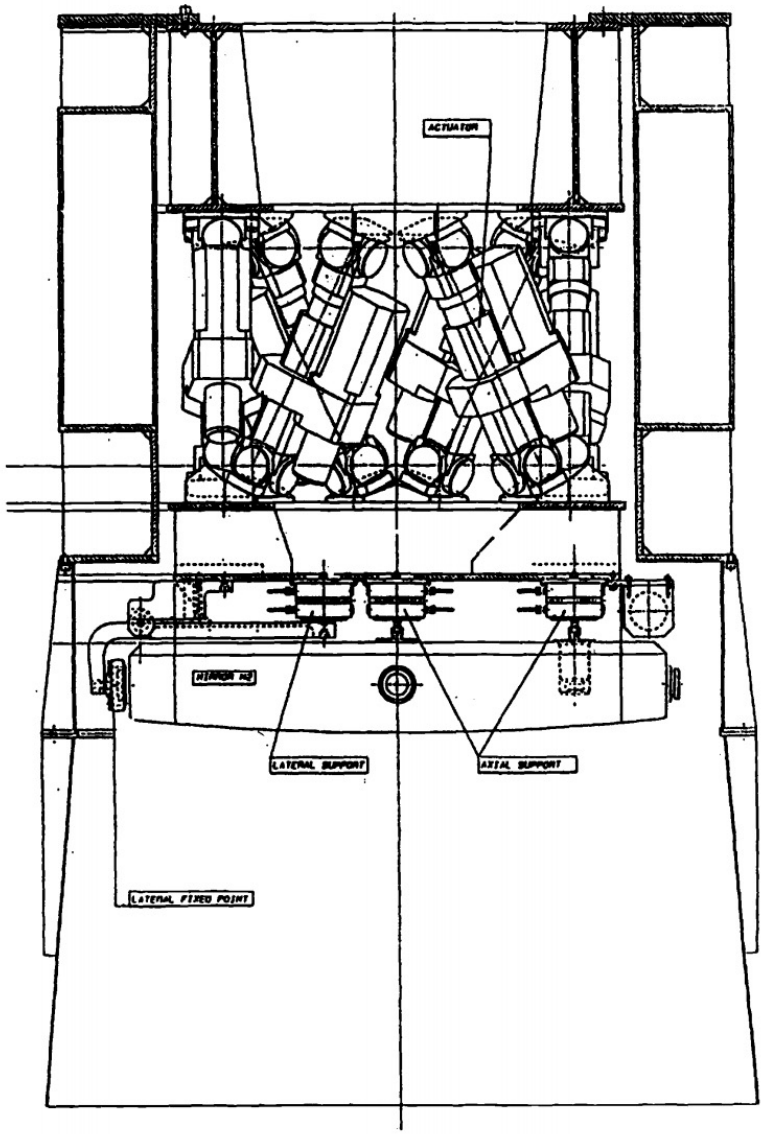

And even the Germans at a WorkShop at ESO noted it…

The Conical "Constant"

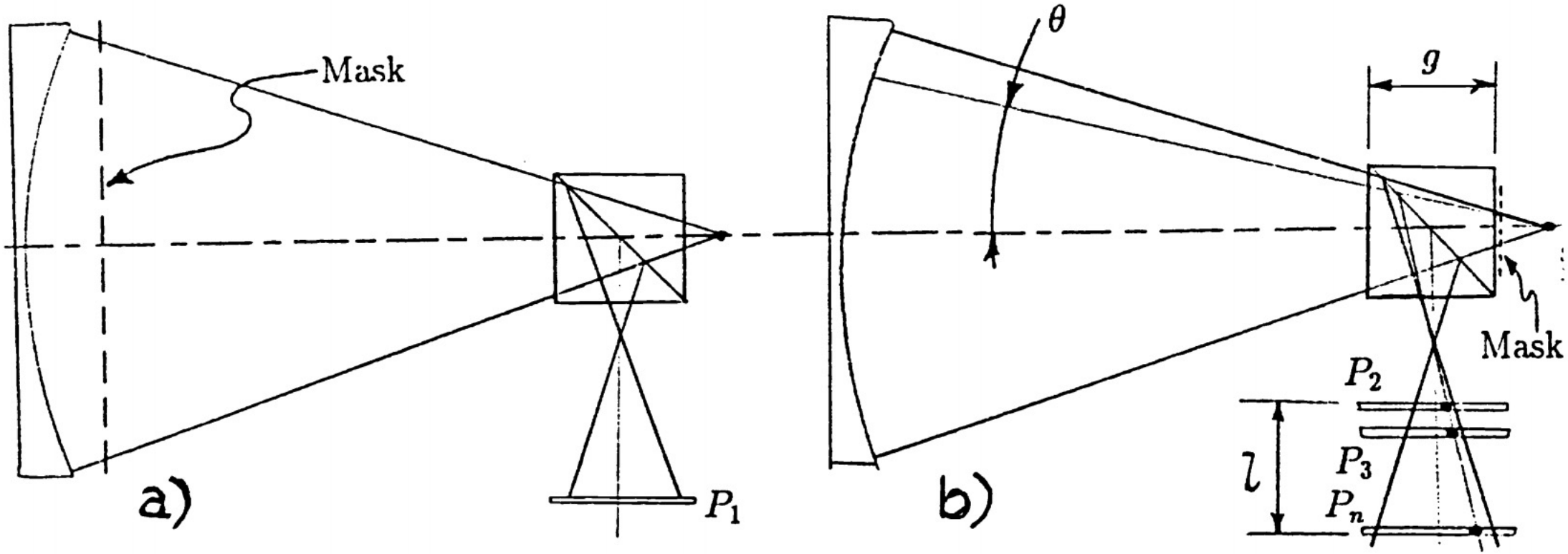

Figure 6a: Scheme of the classical Hartmann test; Figure 6b: The modified scheme. The mask is projected onto the mirror and the returning spots are collected by plates located in various positions $P_2 \ldots P_n$ spanning an l range. This is necessary because projecting the mask on the mirror the absolute calibration of the position of spots on the mirror is lost. This information can be gained through the knowledge of the angle θ via fitting straight lines on the spots collected by the different plates.

Chiomento Venerio
Roberto Ragazzoni
Luciano Traverso

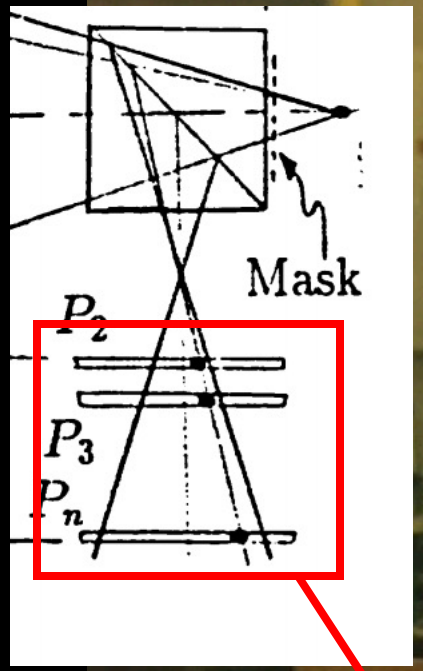
Mask
P_2
P_3
P_n

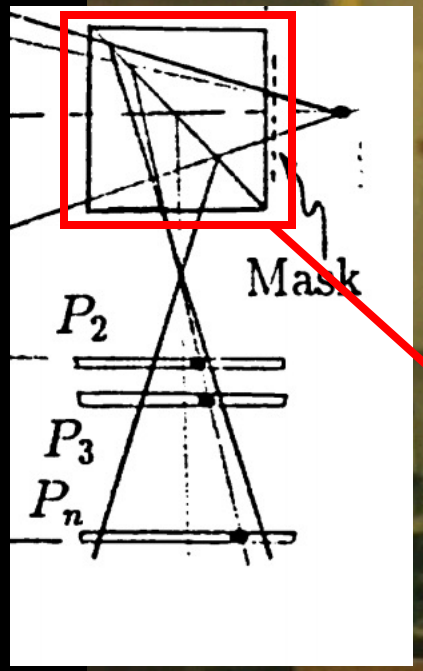
Mask
P_2
P_3
P_n

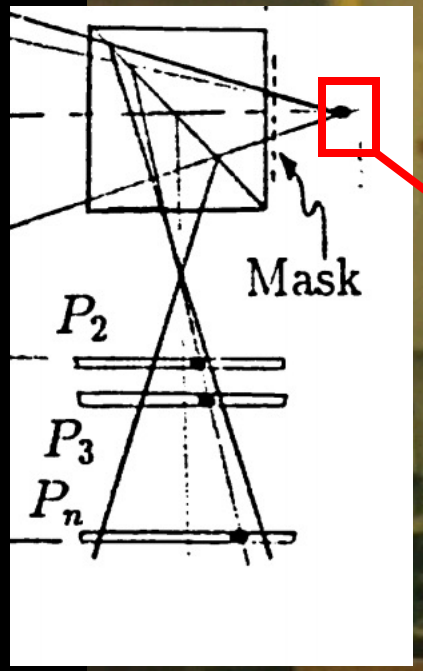
Mask
P_2
P_3
P_n

Adaptive Optics

Adaptive Optics

8 ADAPTIVE OPTICS SYSTEM FOR THE TNG

8.1 Instrument status

P.I. :	Domenico Bonaccini
Technical team :	Luca Fini
	Simone Esposito
	Guido Brusa
	Mauro Pucillo
	Fabio Bortoletto
	Roberto Ragazzoni
	Carlotta Bonoli
	Paolo Stefanini
	Valdemaro Biliotti
	Dario Ducci
	Piero Ranfagni
Science team :	Sperello di Serego Alighieri
	Ernesto Oliva
	Andrea Richichi
	Gianpaolo Piotto
	Roberto Ragazzoni
Approved :	Step 1: March, 1993
Expected completion :	Step 1: June, 1996
Status :	under construction
Location at telescope :	Step 1: Nas A

Adaptive Optics

8 ADAPTIVE OPTICS SYSTEM FOR THE TNG

8.1 Instrument status

P.I. :	Domenico Bonaccini
Technical team :	Luca Fini
	Simone Esposito
	Guido Brusa
	Mauro Pucillo
	Fabio Bortoletto
	Roberto Ragazzoni
	Carlotta Bonoli
	Paolo Stefanini
	Valdemaro Biliotti
	Dario Ducci
	Piero Ranfagni
Science team :	Sperello di Serego Alighieri
	Ernesto Oliva
	Andrea Richichi
	Gianpaolo Piotto
	Roberto Ragazzoni
Approved :	Step 1: March, 1993
Expected completion :	Step 1: June, 1996
Status :	under construction
Location at telescope :	Step 1: Nas A

JOURNAL OF MODERN OPTICS, 1997, VOL. 44, NO. 7, 1259–1267

Optimum configurations for two off-axis parabolae used to make an optical relay

A. GHEDINA
Department of Astronomy, University of Padova-vicolo dell'Osservatorio 5, I-35122 Padova, Italy

and R. RAGAZZONI
Astronomical Observatory of Padova-vicolo dell'Osservatorio 5, I-35122 Padova, Italy

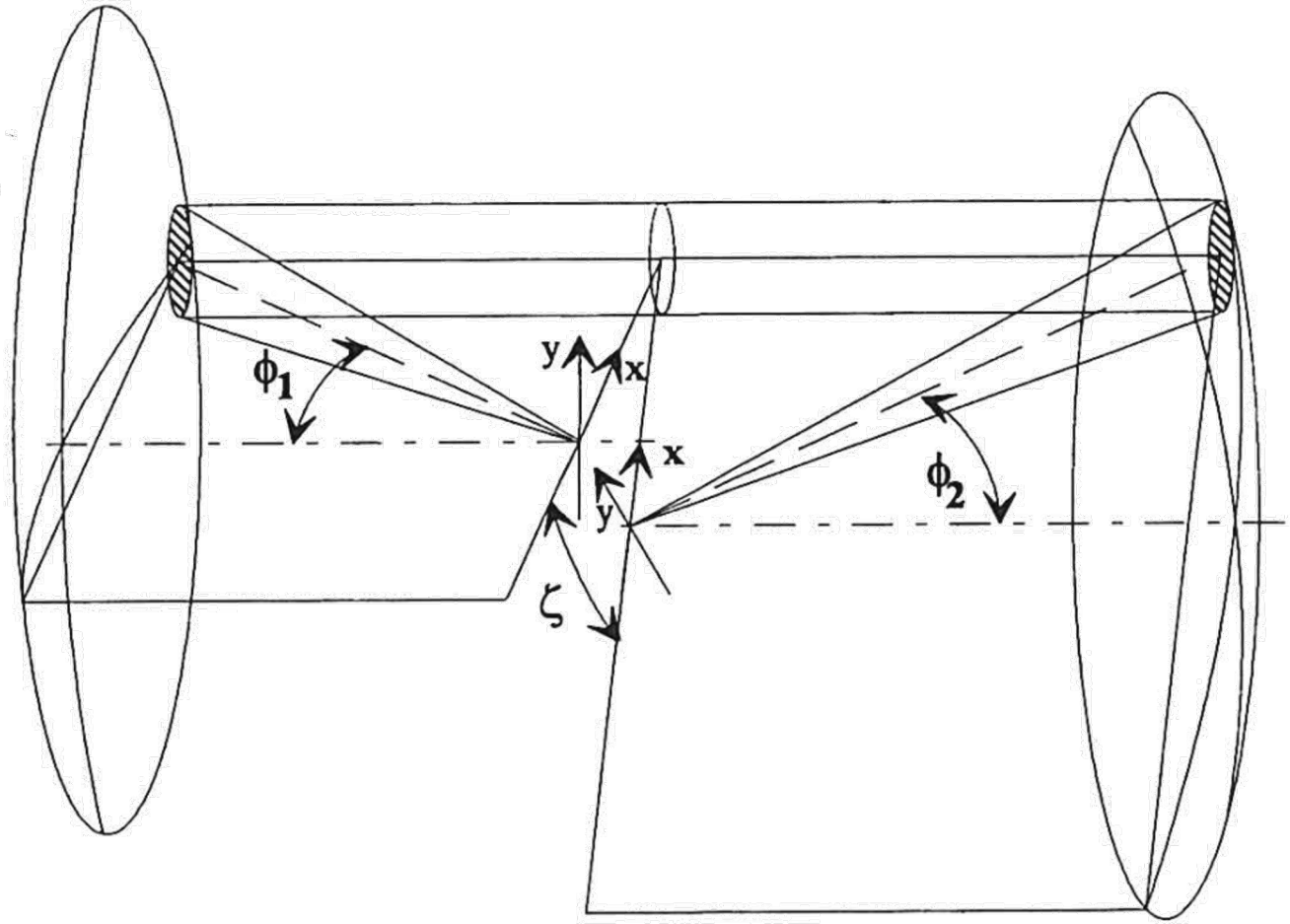

Figure 3. Optical relay in a configuration where the principal rays do not lie in the same plane. When $\zeta = 0$ the $(x, y)_1$ and $(x, y)_2$ axes are co-aligned.

A New Kind of Deformable Mirror

Letter to the Editor

A liquid adaptive mirror

R. Ragazzoni[1,2] and E. Marchetti[3]

[1] Astronomical Observatory of Padova, vicolo dell'Osservatorio 5, I-35122 Padova, Italy
[2] Project Office of the Telescopio Nazionale GALILEO (TNG), riviera Tiso da Camposampiero 28, I-35122 Padova, Italy
[3] Department of Astronomy, University of Padova, vicolo dell'Osservatorio 5, I-35122 Padova, Italy

Received 16 December 1993 / Accepted 14 January 1994

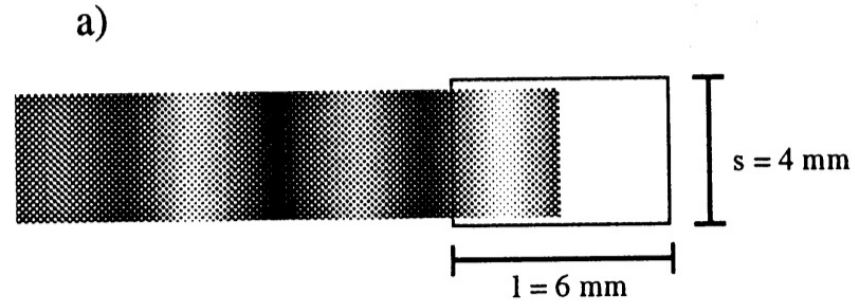

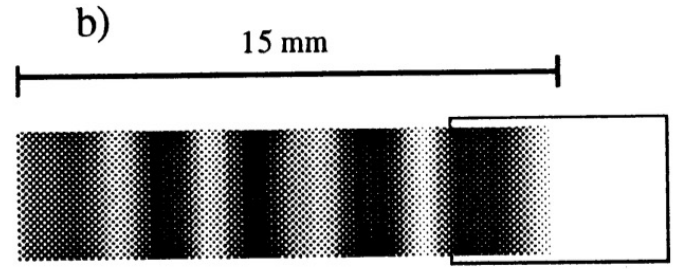

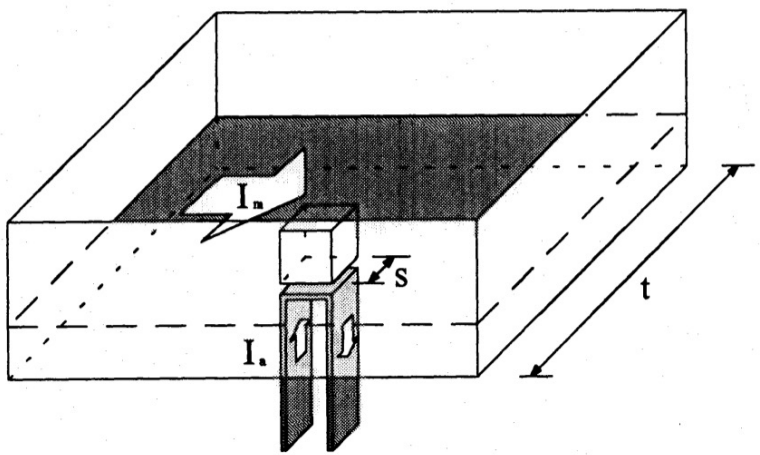

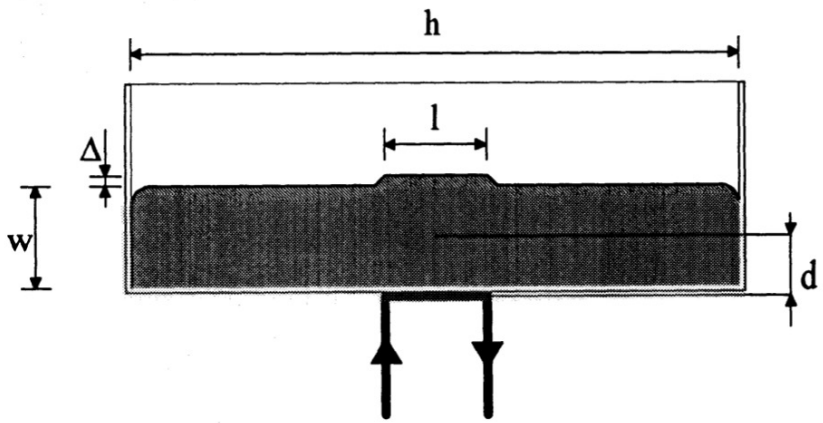

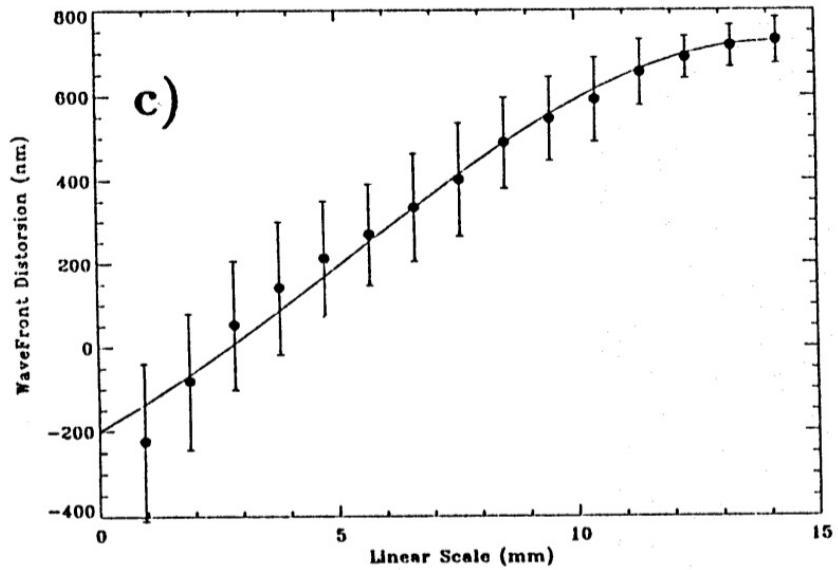

Letter to the Editor

A liquid adaptive mirror

R. Ragazzoni[1,2] and E. Marchetti[3]

[1] Astronomical Observatory of Padova, vicolo dell'Osservatorio 5, I-35122 Padova, Italy
[2] Project Office of the Telescopio Nazionale GALILEO (TNG), riviera Tiso da Camposampiero 28, I-35122 Padova, Italy
[3] Department of Astronomy, University of Padova, vicolo dell'Osservatorio 5, I-35122 Padova, Italy

Received 16 December 1993 / Accepted 14 January 1994

[2] Project Office of the Telescopio Nazionale GALILEO (TNG), riviera Tiso da Camposampiero 28, I-35122 Padova, Italy

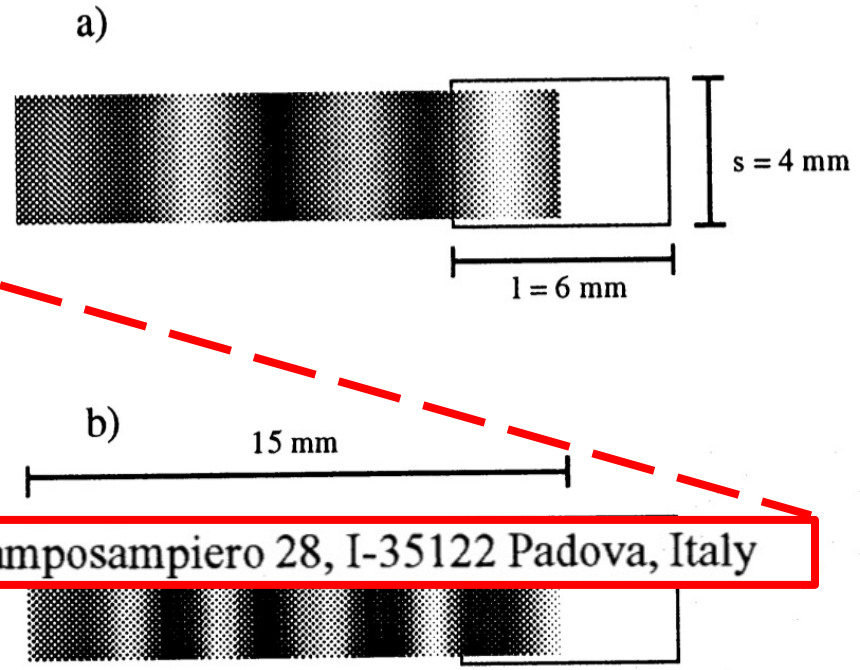

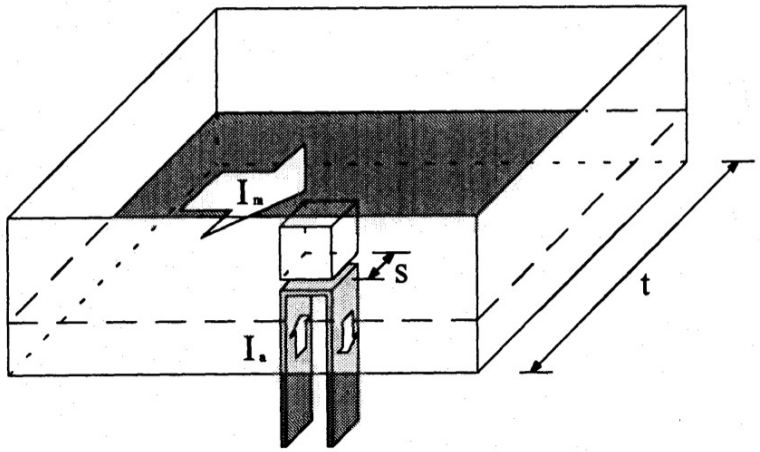

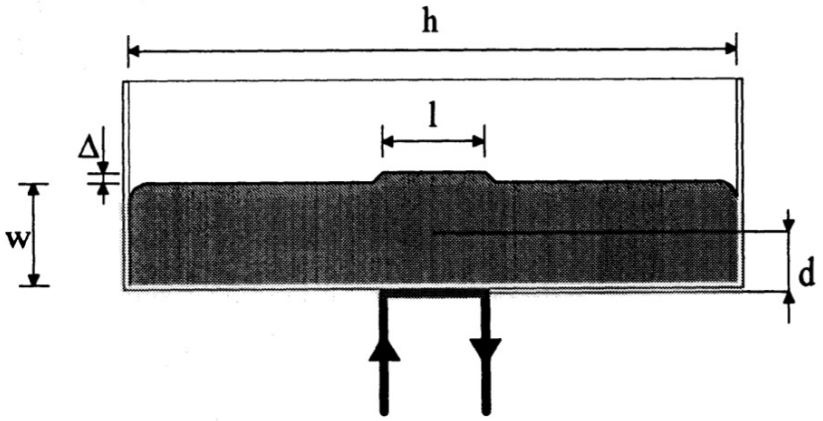

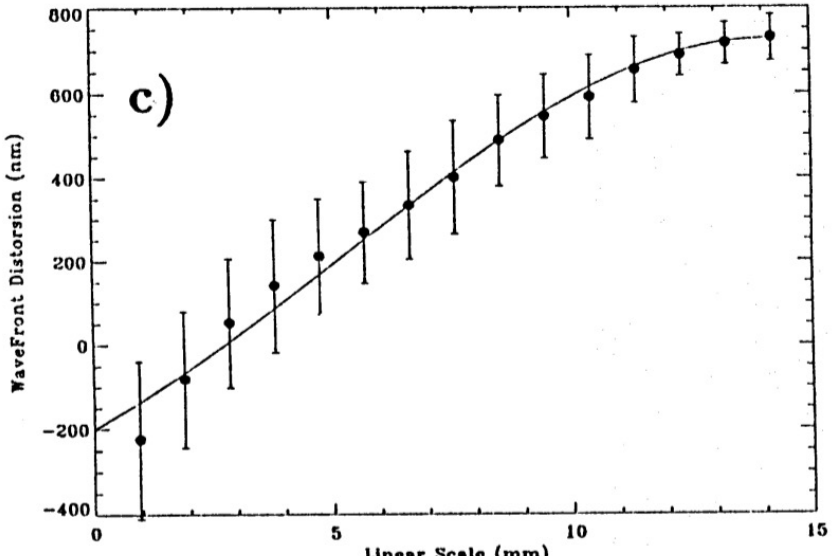

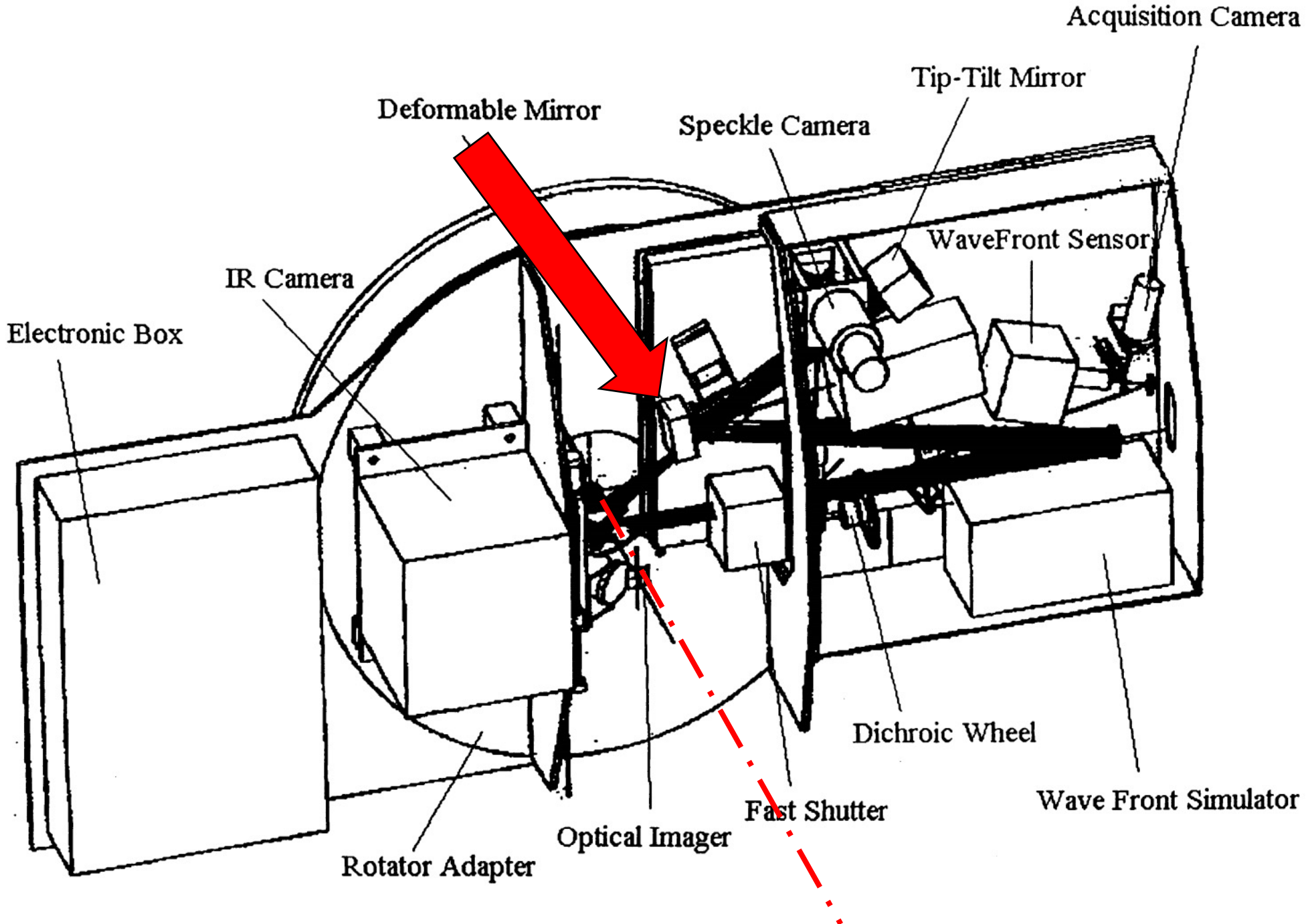
Acquisition Camera
Tip-Tilt Mirror
Deformable Mirror
Speckle Camera
WaveFront Sensor
IR Camera
Electronic Box
Dichroic Wheel
Wave Front Simulator
Fast Shutter
Optical Imager
Rotator Adapter

Let’s test…!!

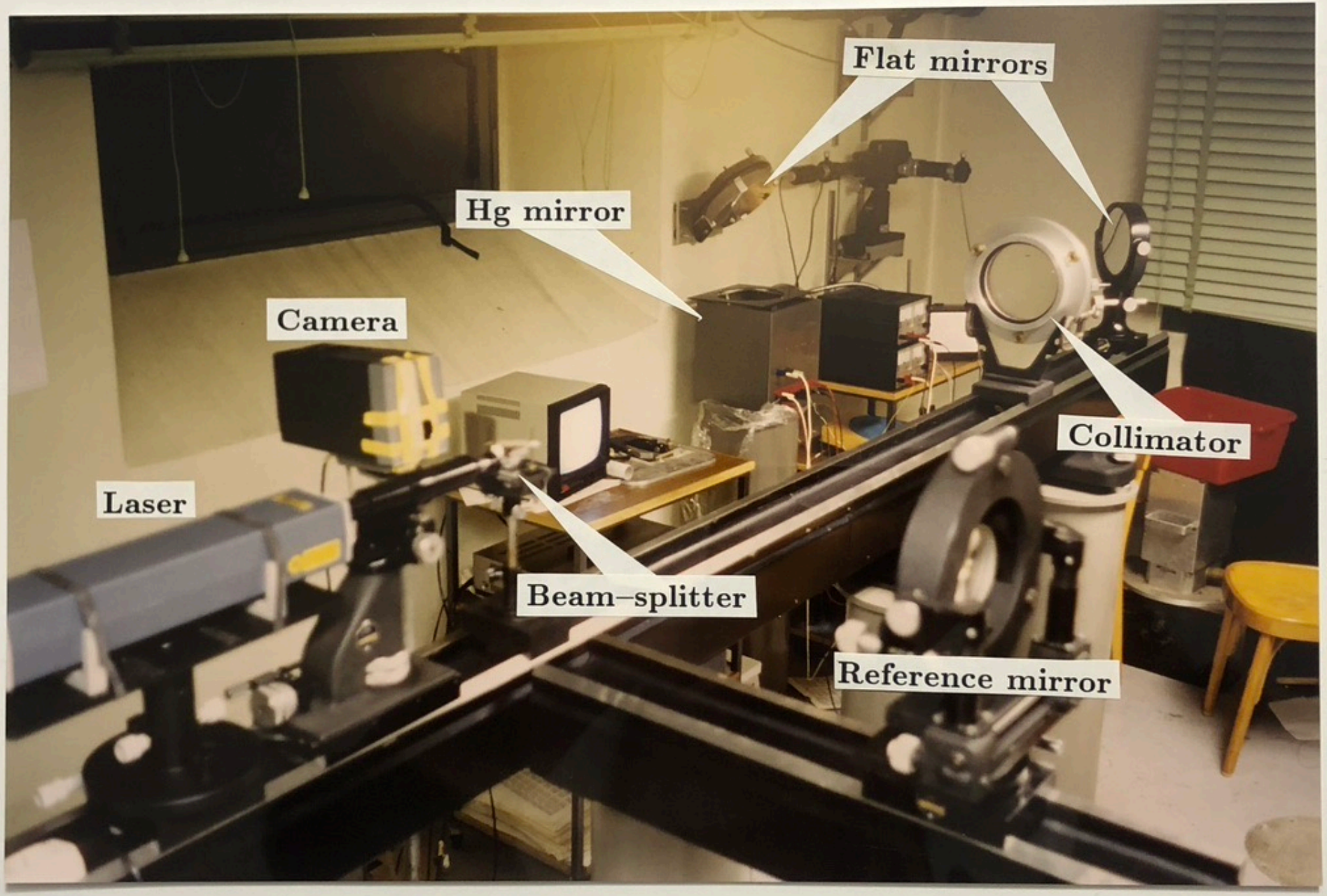
Flat mirrors
Hg mirror
Camera
Collimator
Laser
Beam–splitter
Reference mirror

Home > Review of Scientific Instruments > Volume 72, Issue 11 > 10.1063/1.1412857

Full • Submitted: 07 March 2001 • Accepted: 29 August 2001 • Published Online: 26 October 2001

Optical elements based on the use of renewable liquid films with magneto-electrostatic control

Review of Scientific Instruments **72**, 4042 (2001); https://doi.org/10.1063/1.1412857

pp. 1-6 (2009) • https://doi.org/10.1364/AO.48.000001

Dynamic response of ferrofluidic deformable mirrors

Jocelyn Parent, Ermanno F. Borra, Denis Brousseau, Anna M. Ritcey, Jean-Philippe Déry, and Simon Thibault

Magnetic Fluid Deformable Mirrors

Authors | Authors and affiliations

Zhizheng Wu ✉, Azhar Iqbal, Foued Ben Amara

22 July 2016

Mathematical and computational modeling of a ferrofluid deformable mirror for high-contrast imaging

Aaron J. Lemmer, Ian M. Griffiths, Tyler D. Groff, Andreas W. Rousing, N. Jeremy Kasdin

ELSEVIER

Optics & Laser Technology

Volume 125, May 2020, 106021

Development of an adjustable-focus ferrogel mirror

Mojtaba Falahati [a], Wenchen Zhou [b], Allen Yi [b], Lei Li [a] ✉

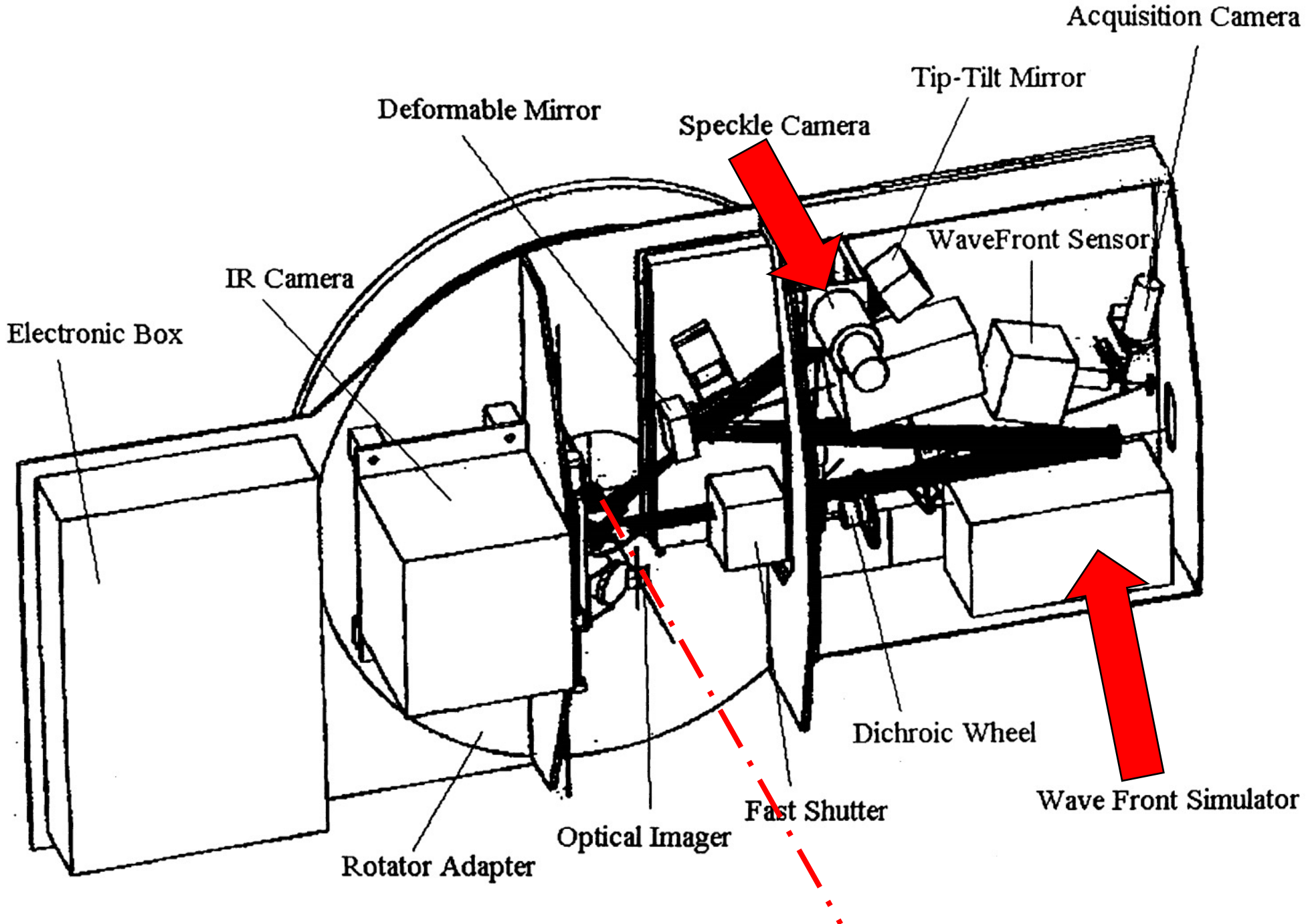
Acquisition Camera
Tip-Tilt Mirror
Deformable Mirror
Speckle Camera
WaveFront Sensor
IR Camera
Electronic Box
Dichroic Wheel
Wave Front Simulator
Fast Shutter
Optical Imager
Rotator Adapter

A New Kind of Detector

AvalanchePhotoDiodes

Sviluppati dal PoliMi

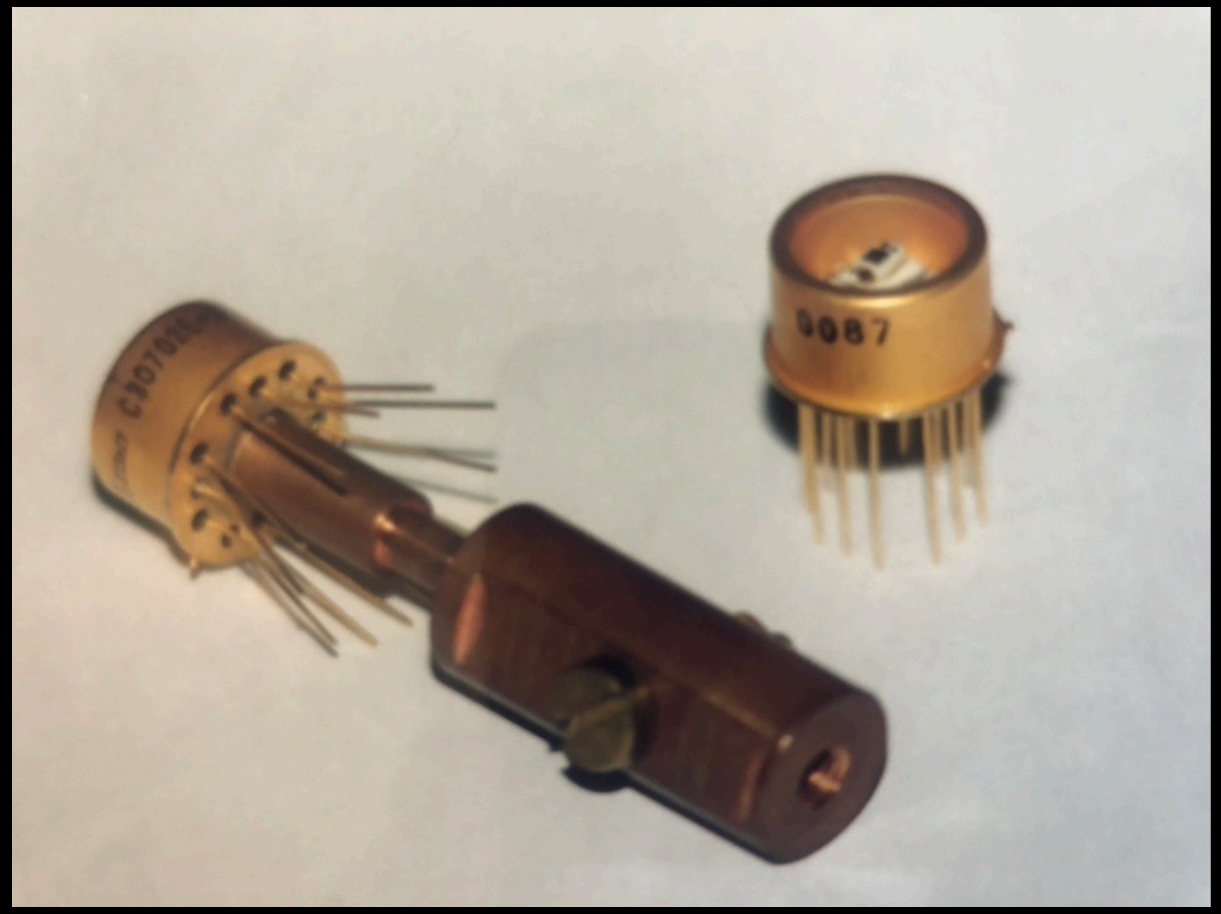

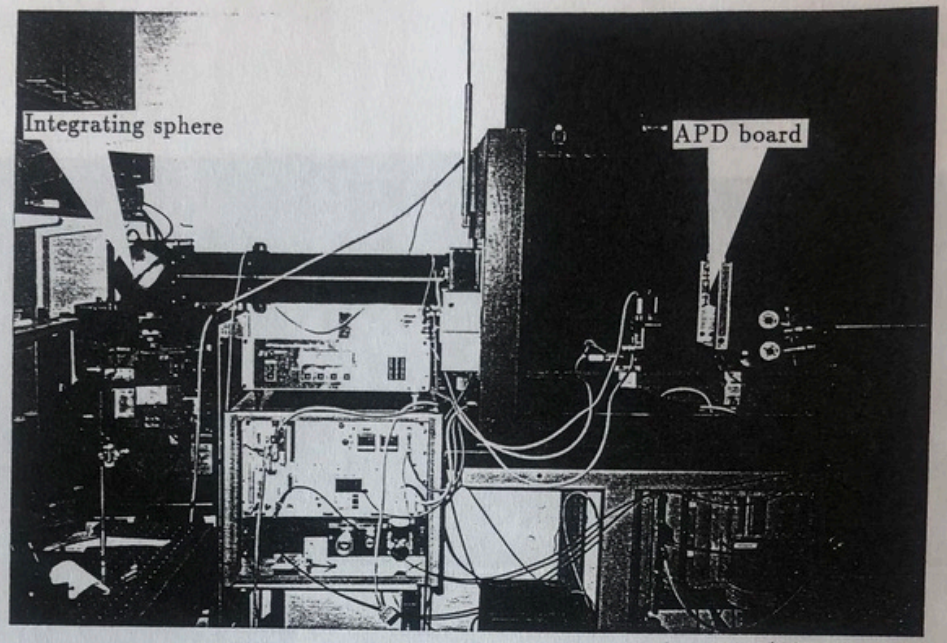

Figure 4: The set–up used for the QE measurements at the ESO laboratory.

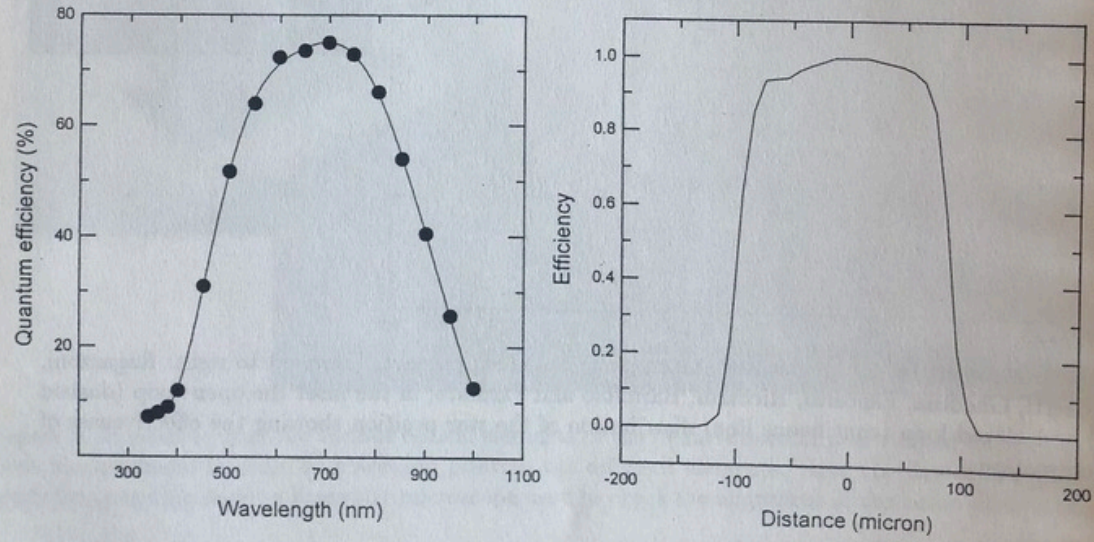

Figure 5: **Left:** the absolute quantum efficiency vs. wavelength for one of the better APD: the no.88; **Right:** a scan of the quantum efficiency over the APD region: the sensitive area is confirmed to have a size of the order of $200\mu m$.

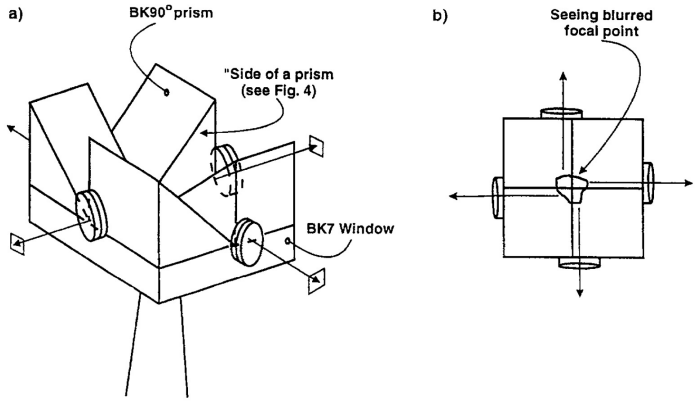
a)
BK90° prism
"Side of a prism
(see Fig. 4)
BK7 Window

b)
Seeing blurred
focal point

M-UMR5.25

C
D
B
A

Arcetri

Asiago

One of the few high efficiency APD-based tip-tilt sensor

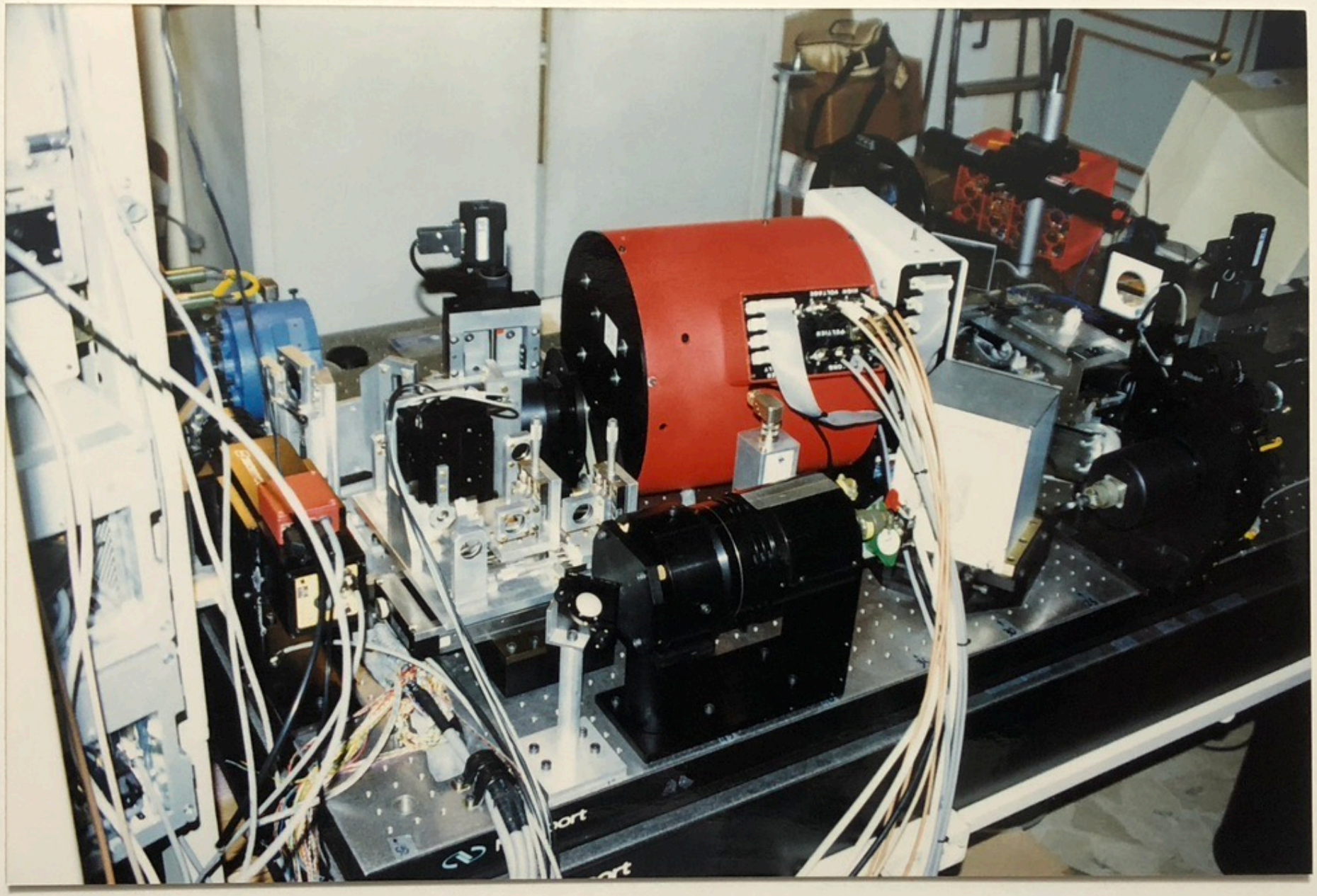

A New WaveFront Sensor

WaveFront Sensing

- At the time we started what we nicknamed AdOpt@TNG there was three major WaveFront sensors employed in similar systems:

1. Shack-Hartmann WFS
2. Shack-Hartmann WFS
3. Shack-Hartmann WFS

- We built, used and learn how to treat one for the Active Optics business
- The only degree of freedom was the number of lenslet… 2x2, 4x4, 8x8 or so…
- The largest the number of subaperture the best the correction but light being split into more channels would require a brightest reference star

WaveFront Sensing

Initially conceived just as a way to rearrange pixels in a “Shack-Hartmann-like” Wavefront Sensor, so that one can electronically choose The number of equivalent lenslet leading to a “flexible Shack-Hartmann”

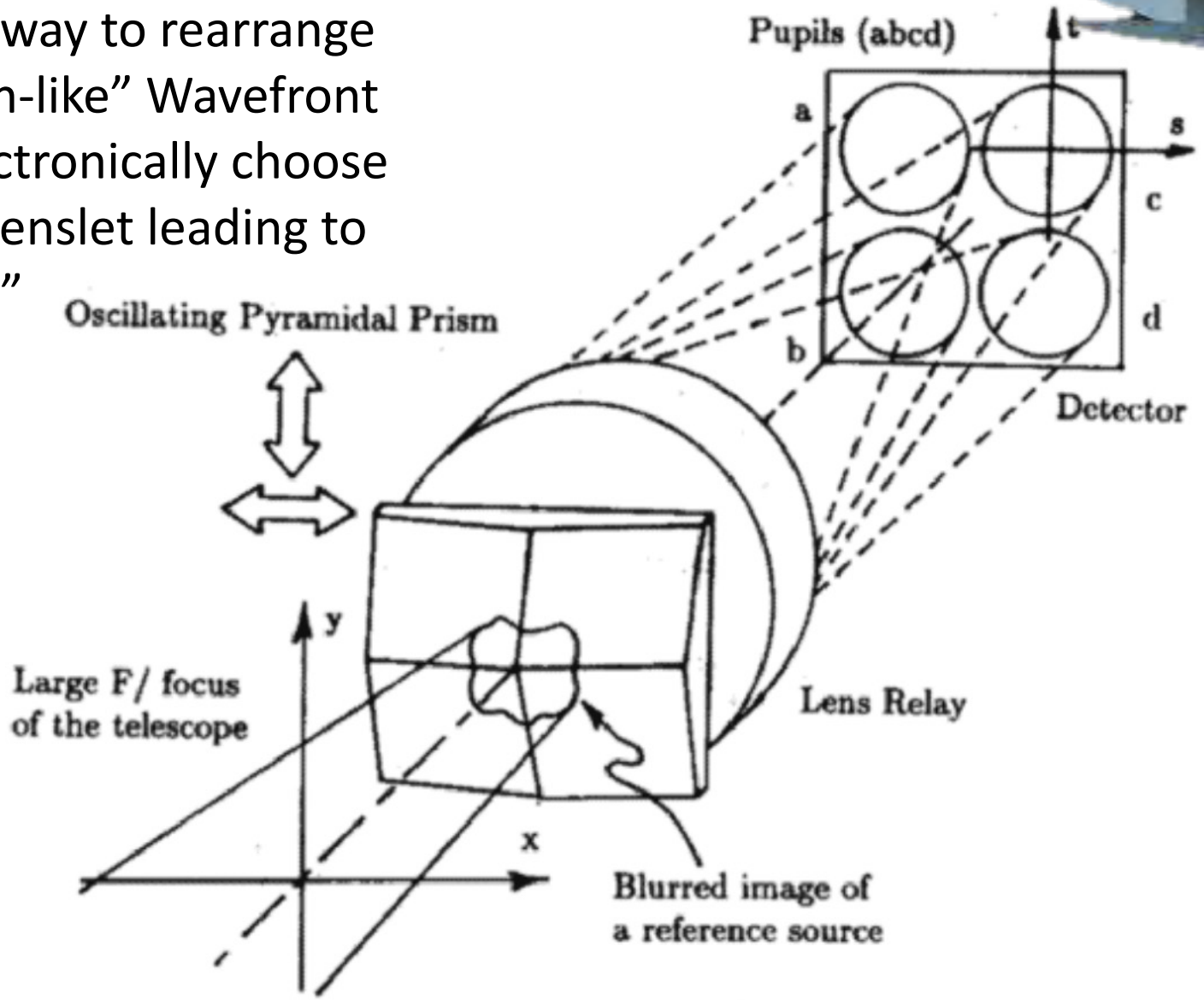

A New WaveFront Sensor

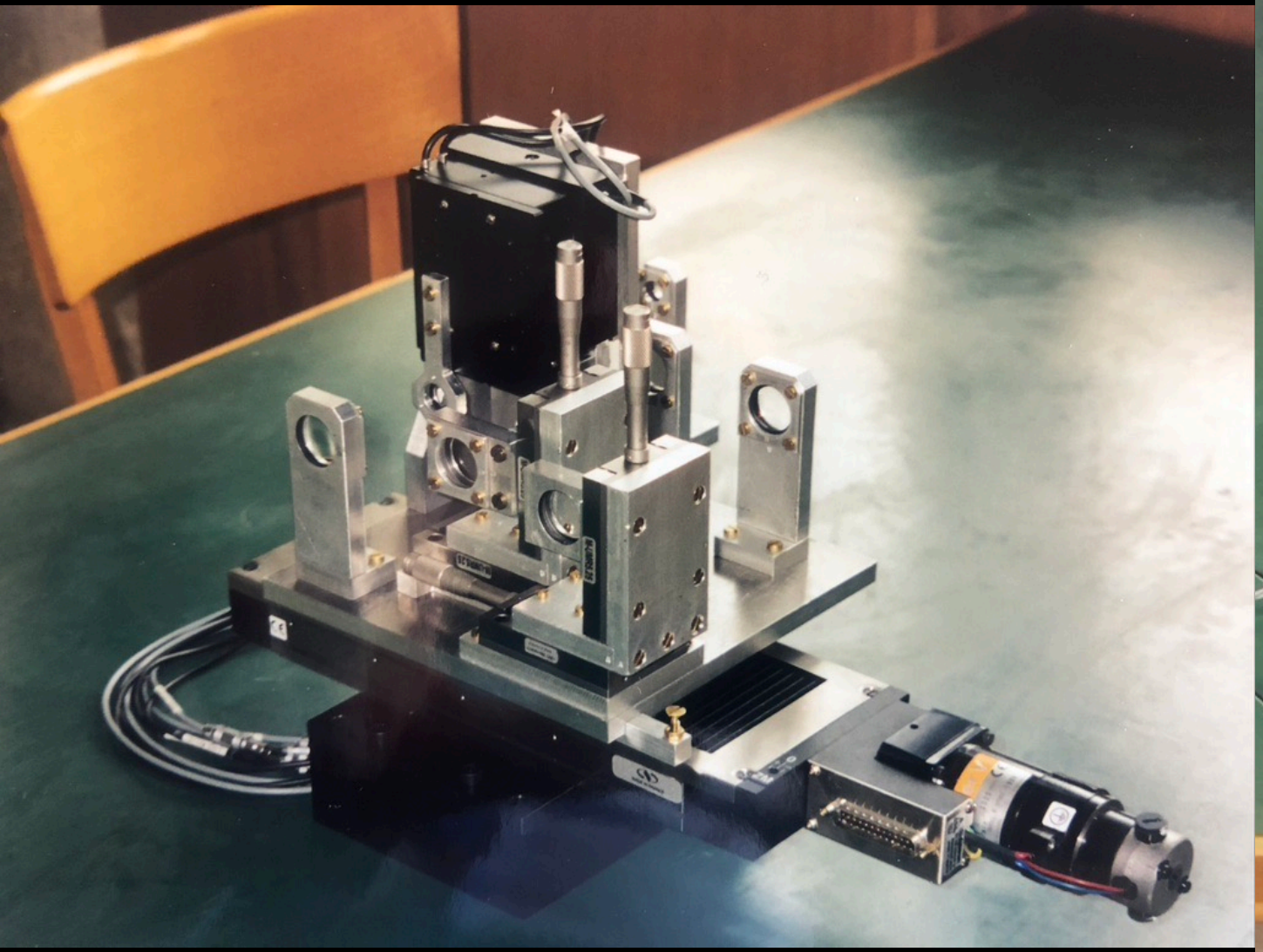

A New WaveFront Sensor

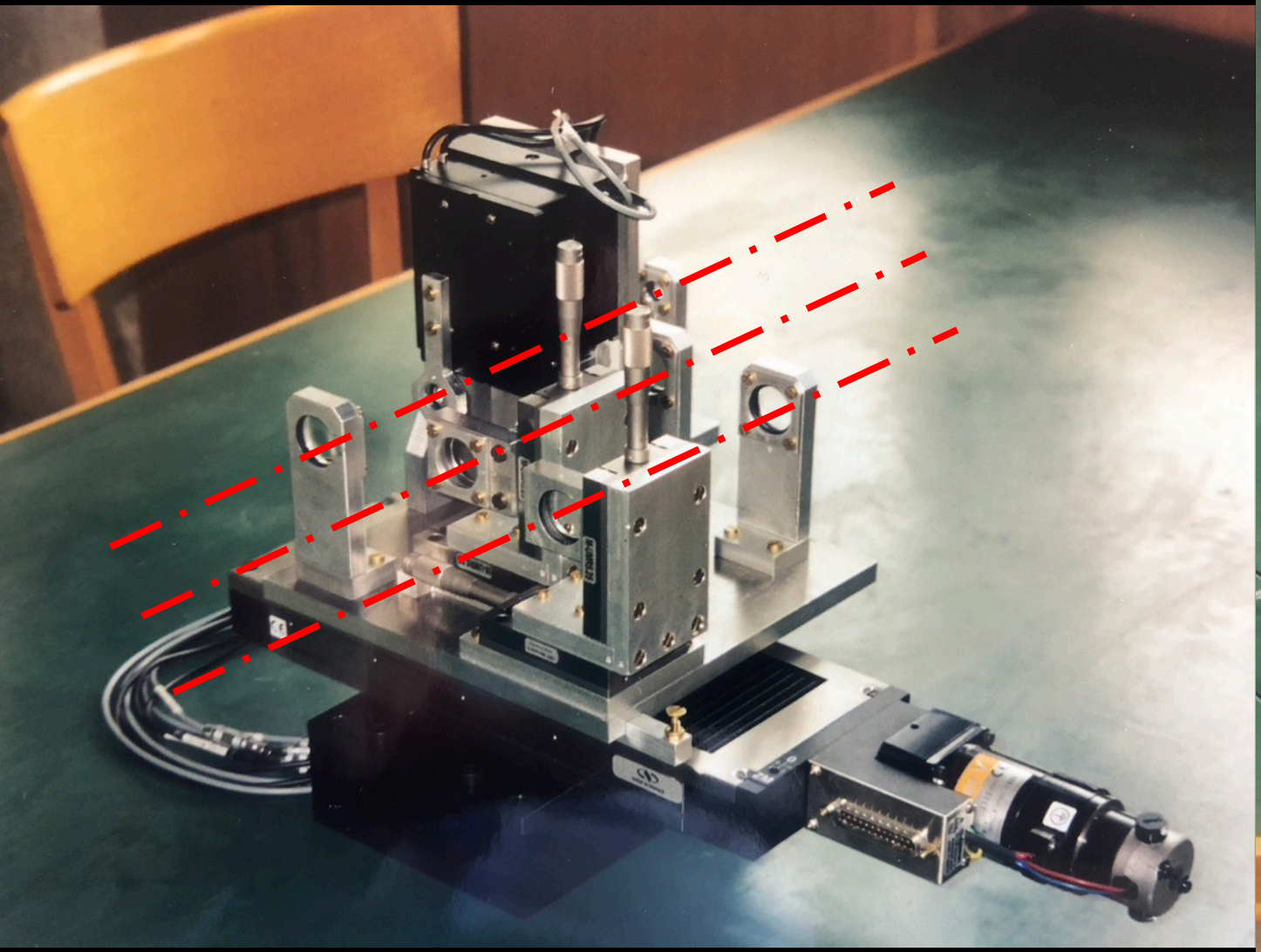

A New WaveFront Sensor

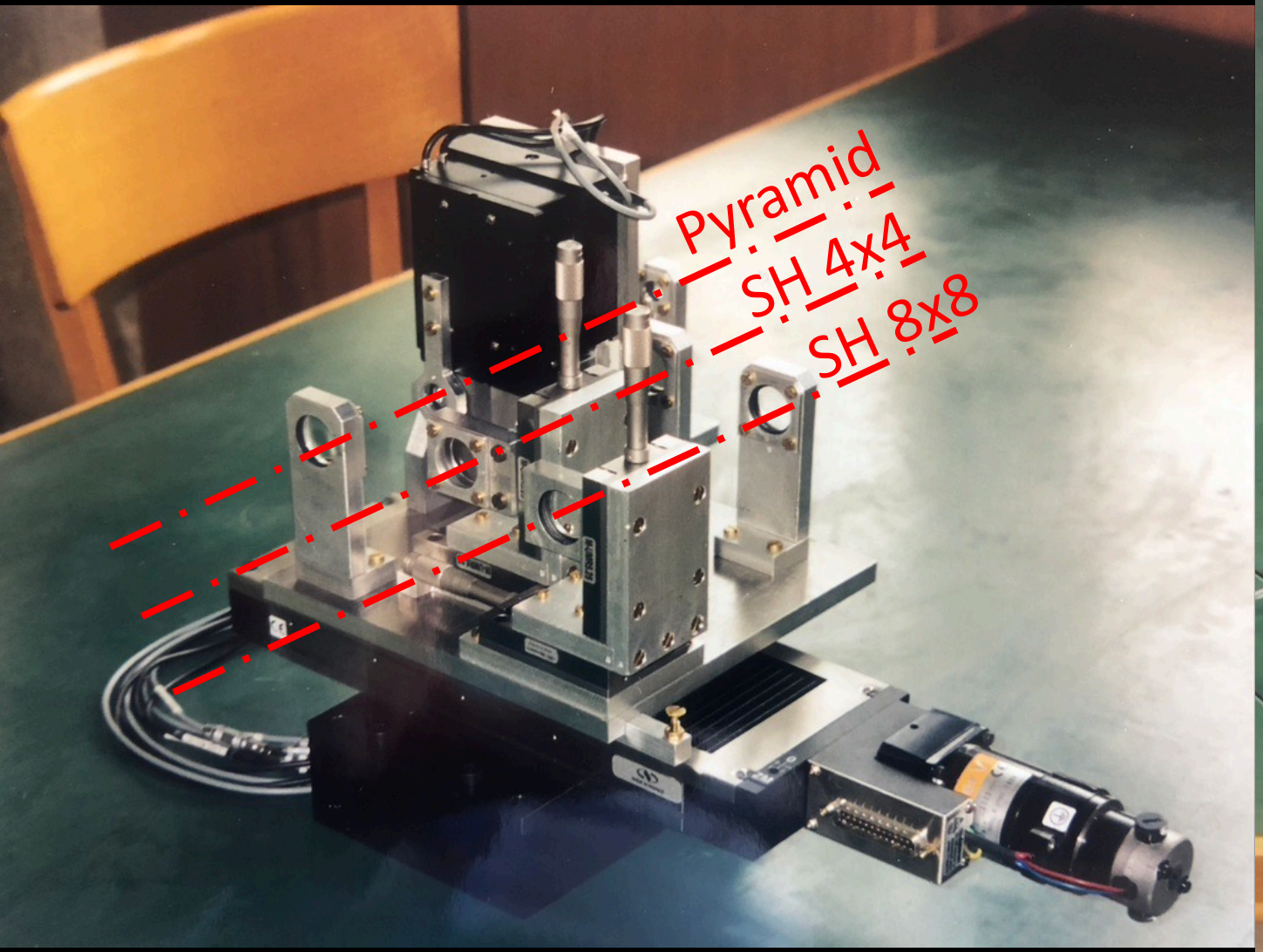

A New WaveFront Sensor

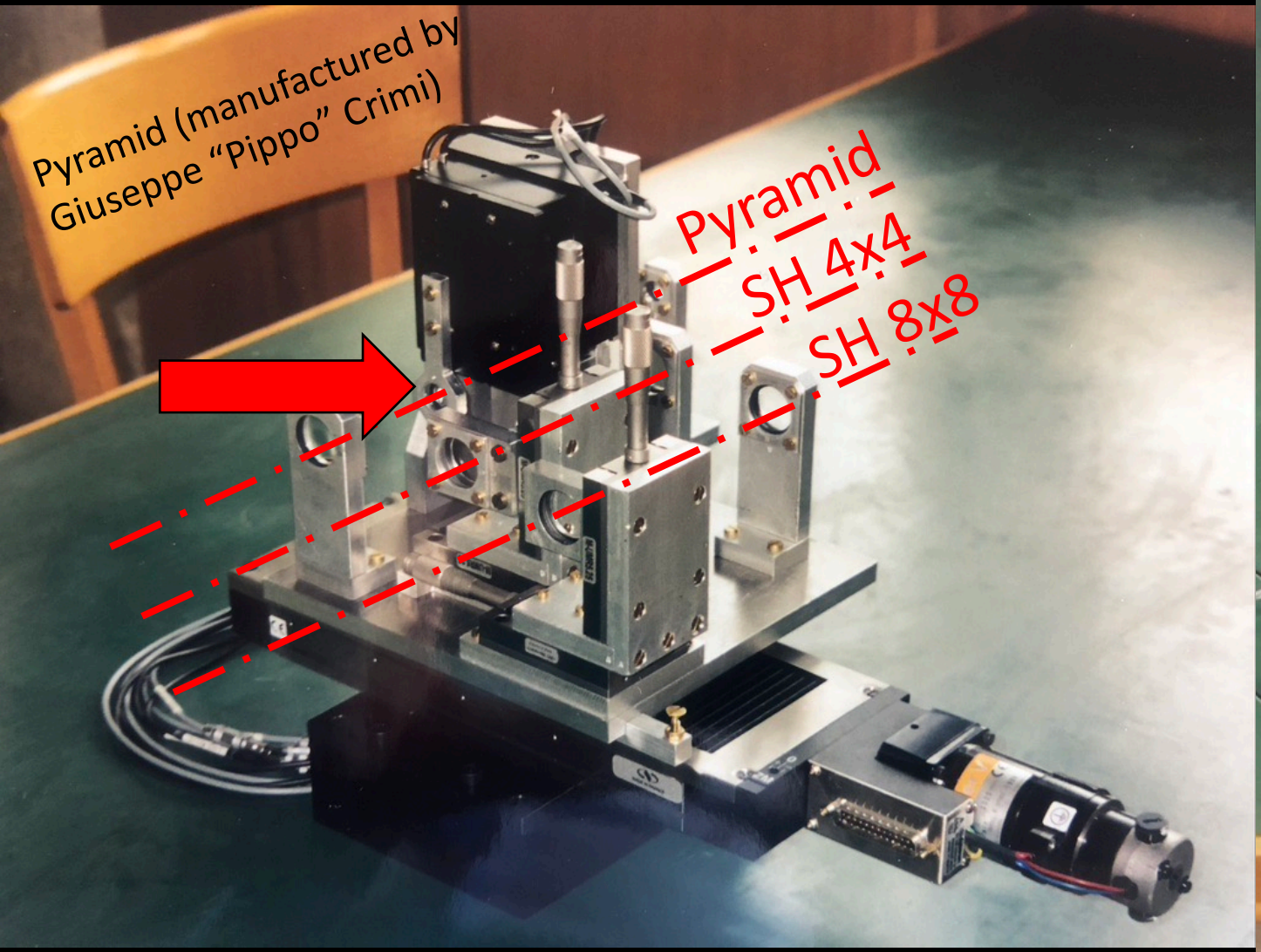

A New WaveFront Sensor

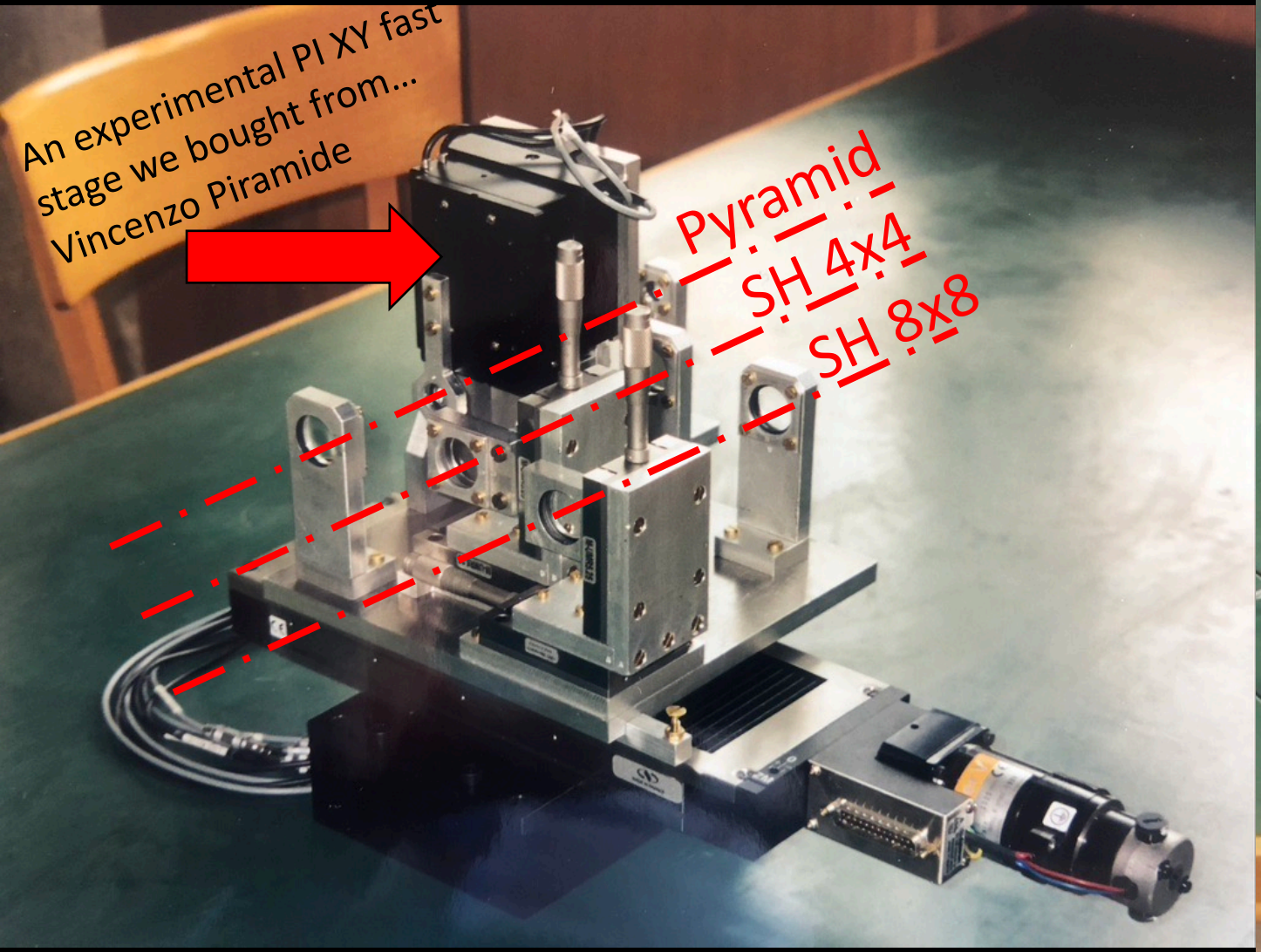

WaveFront Sensing

Although our new concept attracted
The attention of many, in and out the
Country we realized it is also much
more sensible than the ubiquitous
Shack-Hartmann only four years later

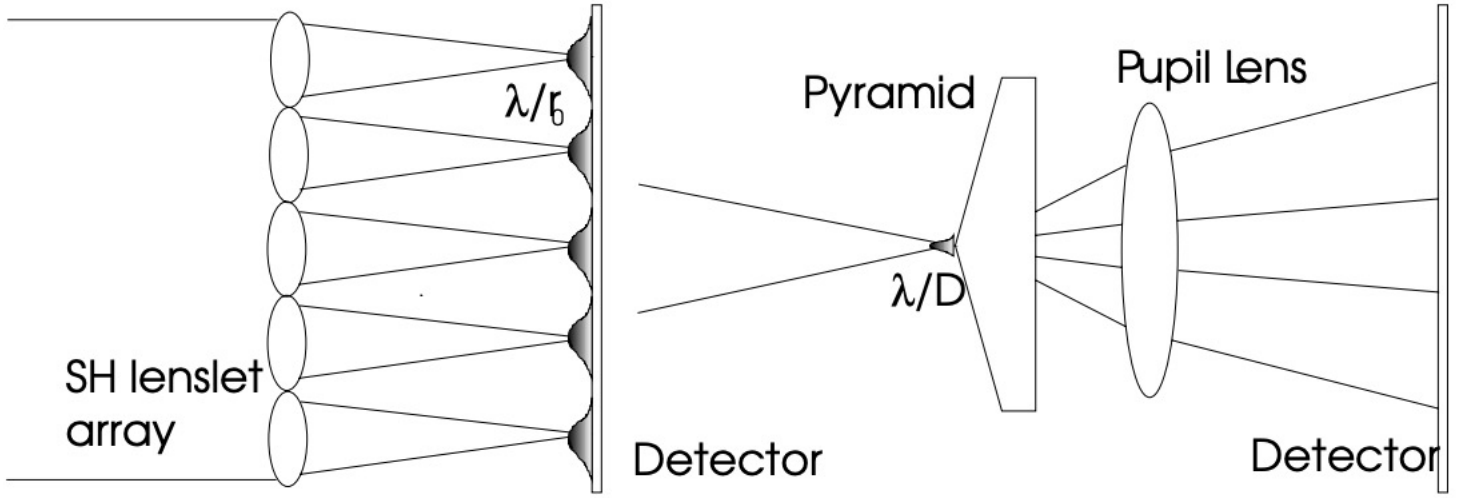

Fig. 1. The SH (left) and the pyramidic (right) WFS compared; both the WFS are shown in the perfectly close loop situation. When a tilt of the order of λ/D is introduced the efficiency of the pyramidic WFS is much larger because it acts *after* the recombination of the whole pupil light. In fact the movement of the spot is comparable to its size, while in the SH case all the spots will move of a fraction of their size.

From scratch….

…to (well…) finished parts…

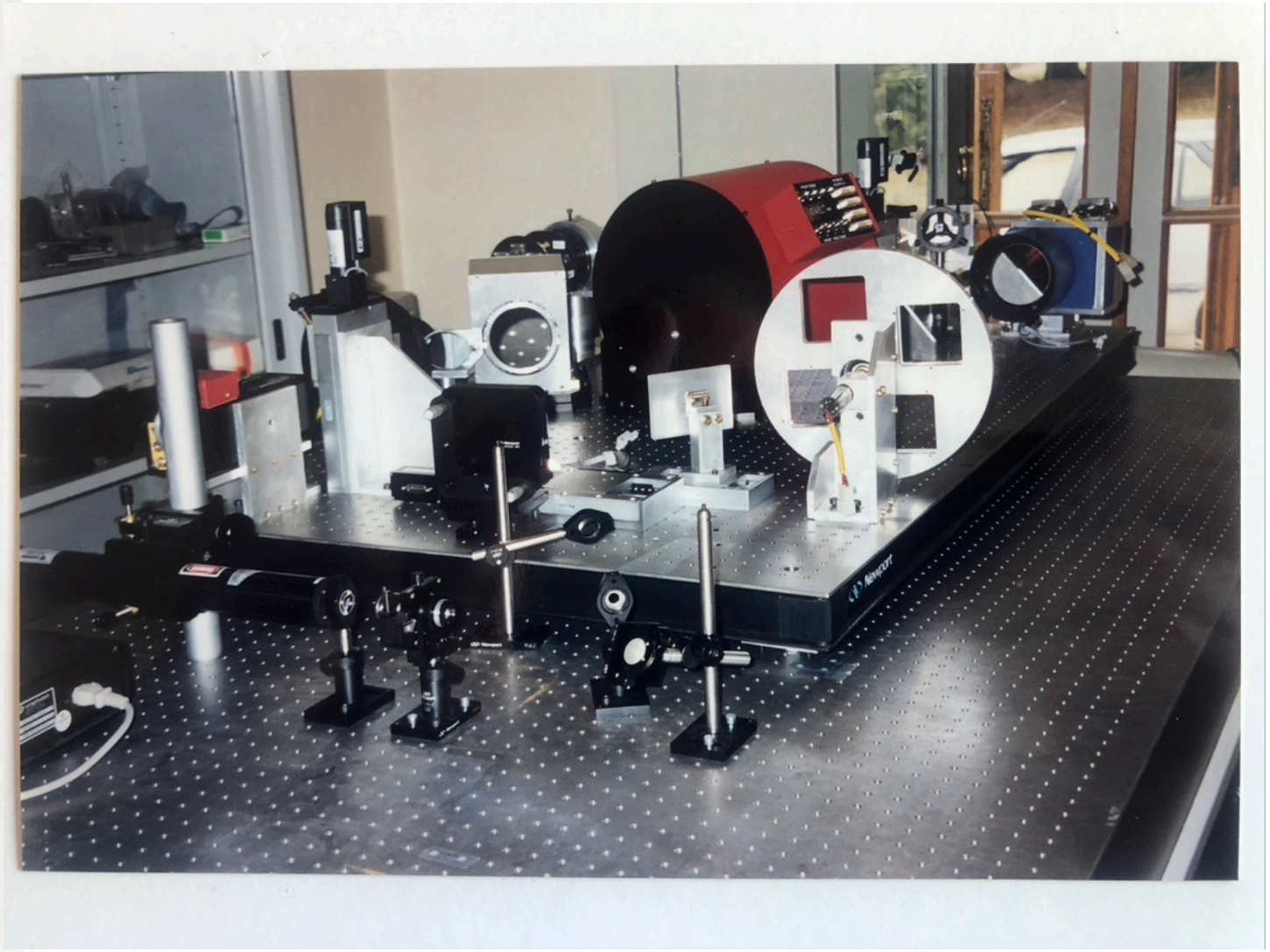

And remember, we manufactured really everything….

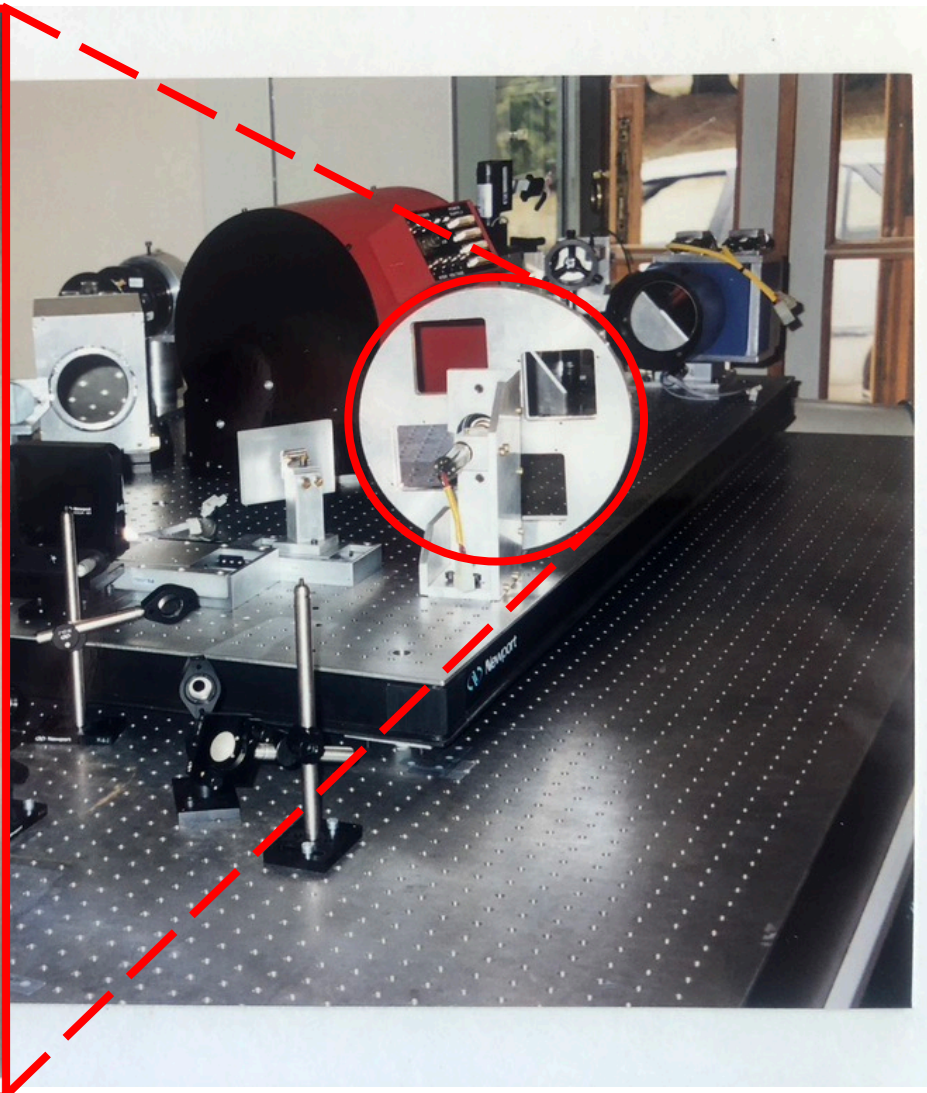

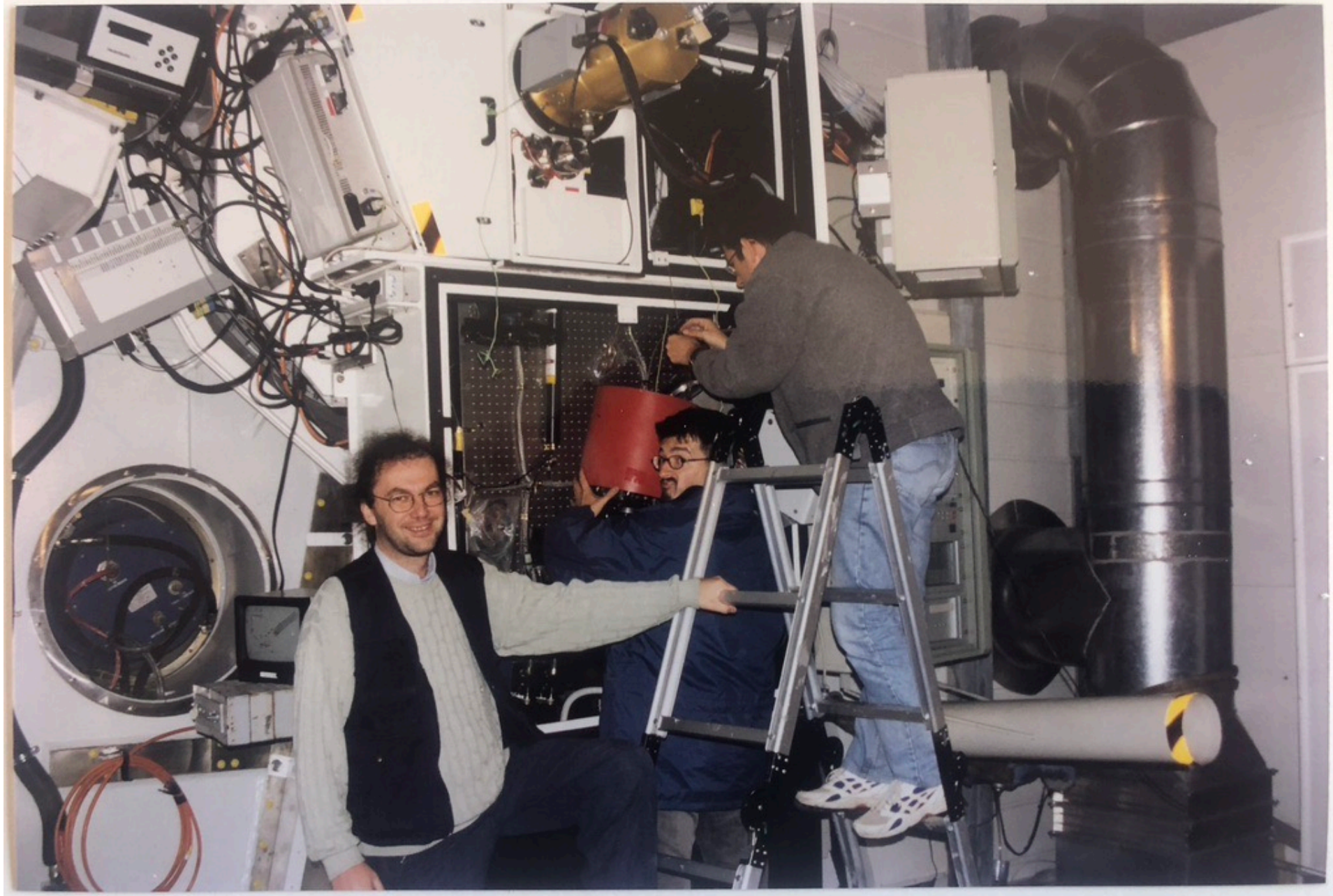

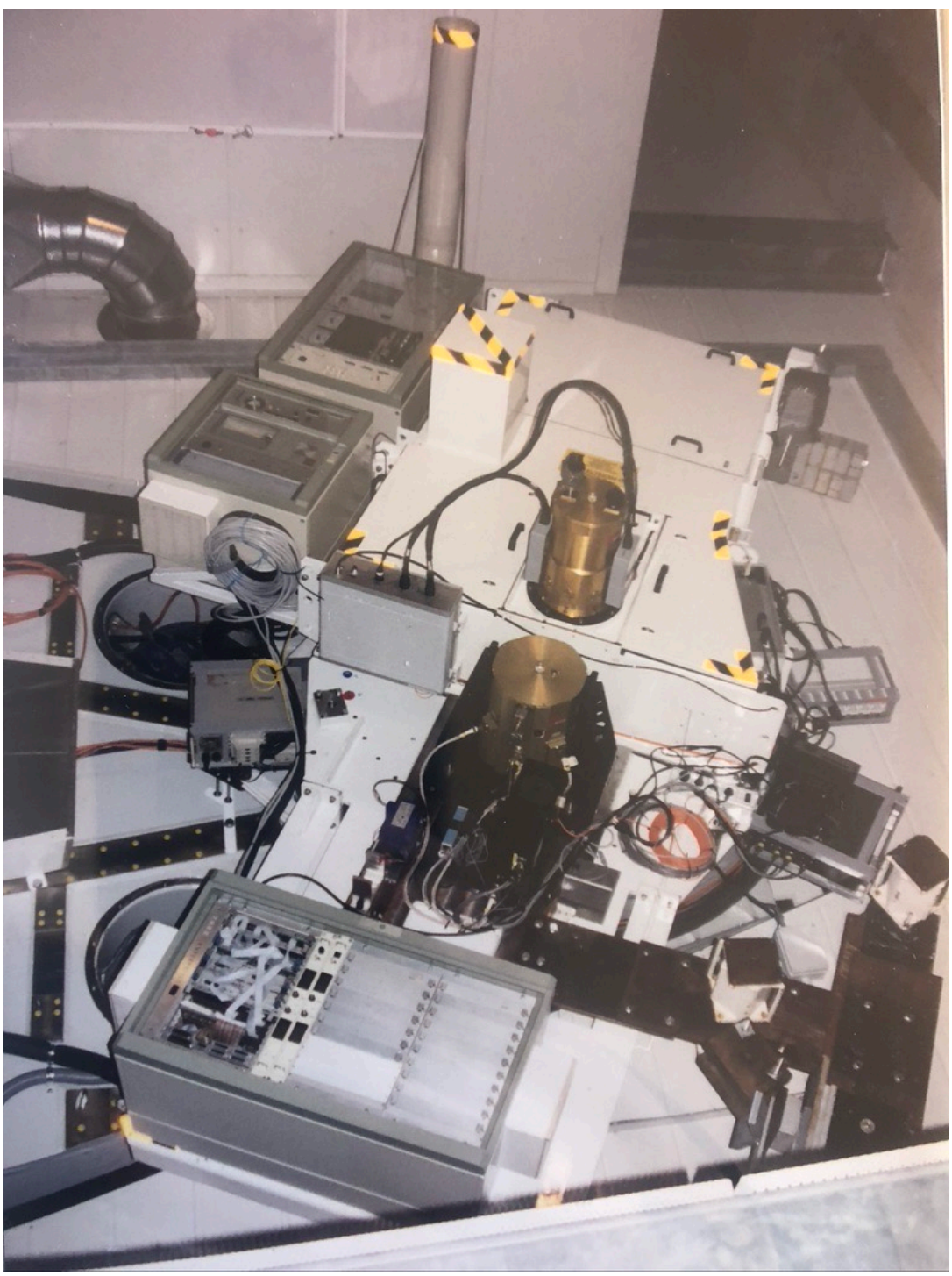

Writing the Software

In “group”

Writing the Software

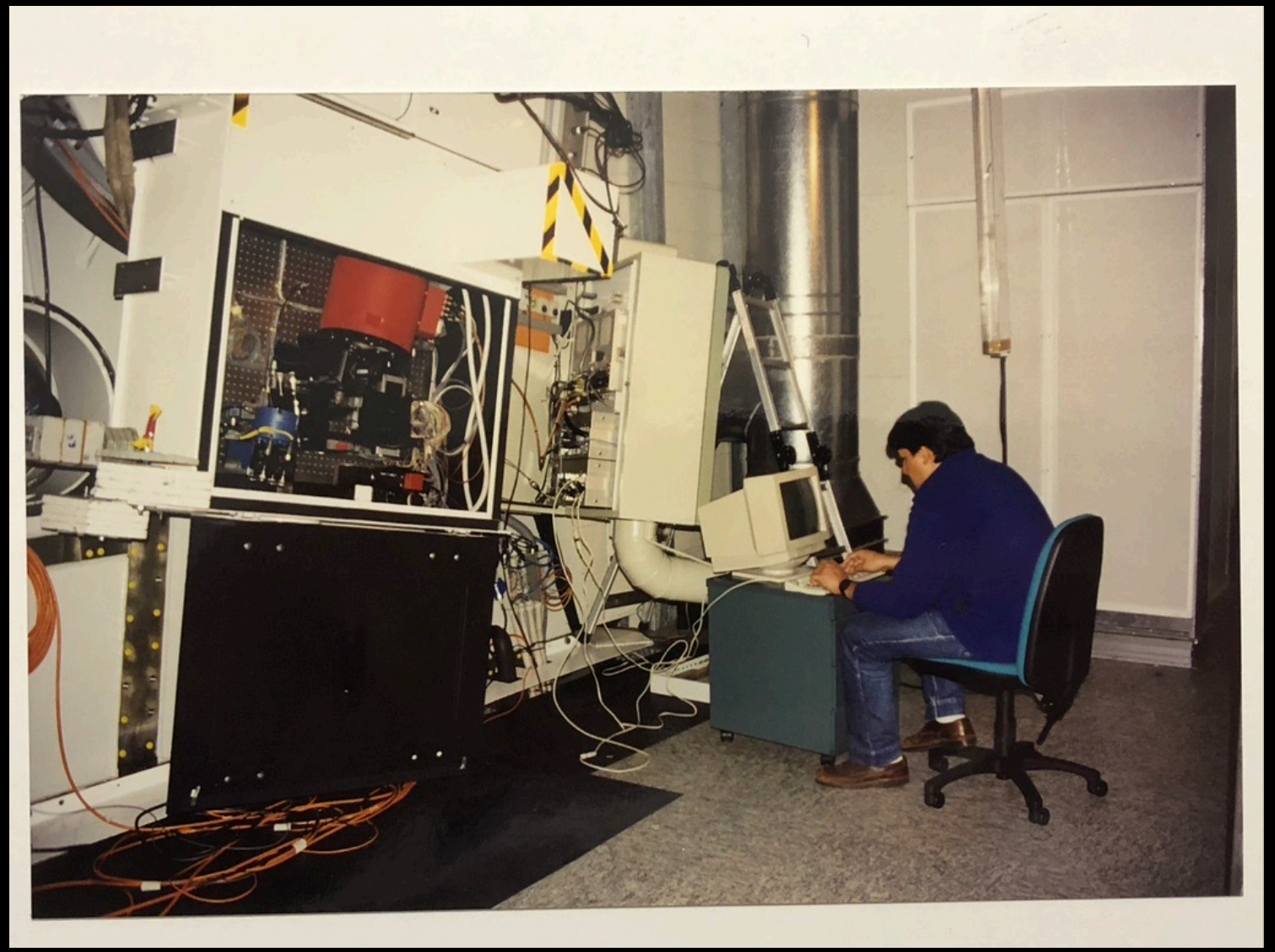

Alone

ESTINTORE
A4

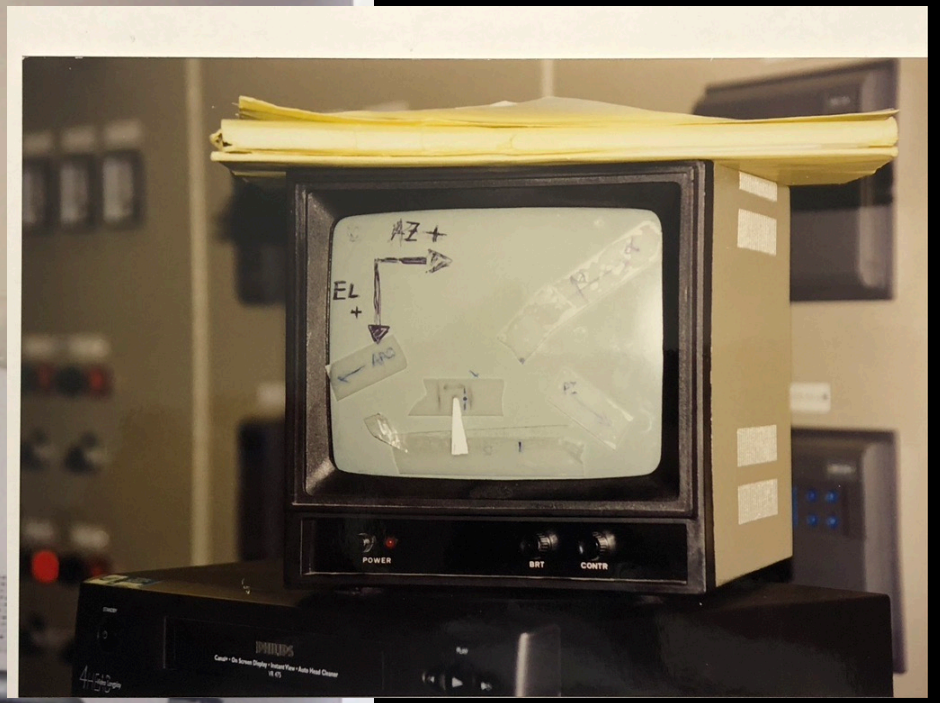
AZ +
EL +
POWER
BRT
CONTR
PHILIPS

Celebrating...

And of course much more...

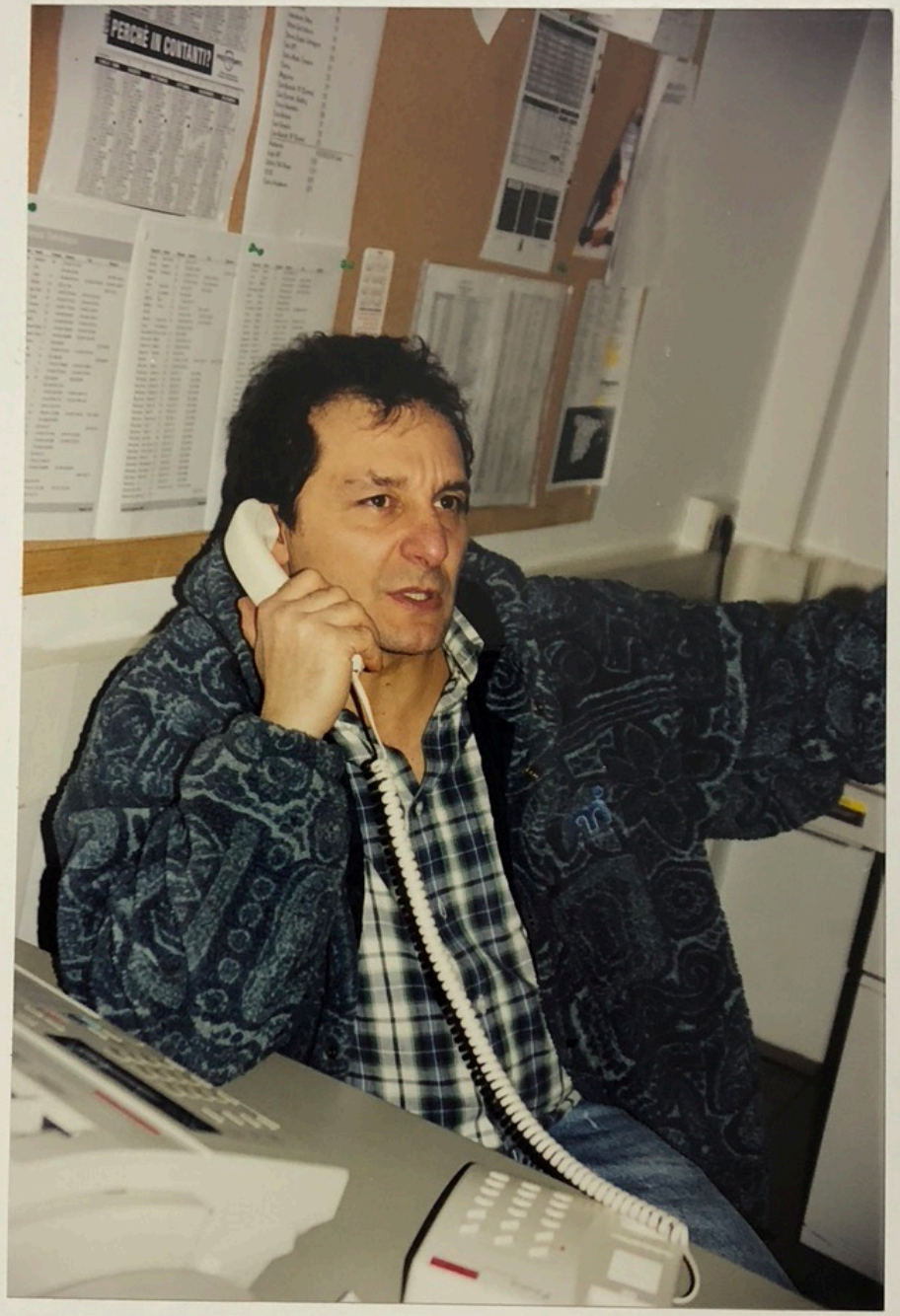
PERCHÉ IN CONTATTO?

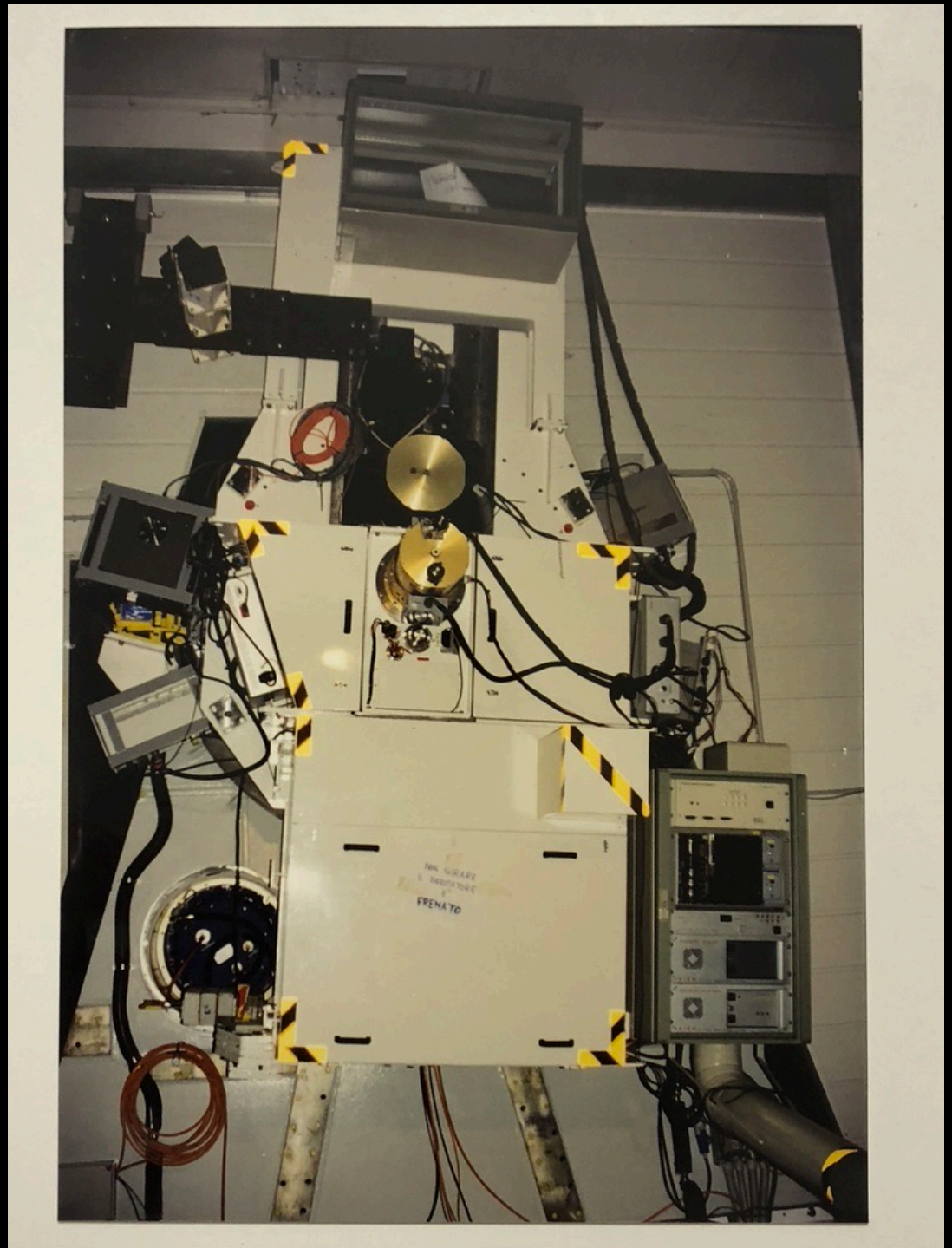
FRENATO

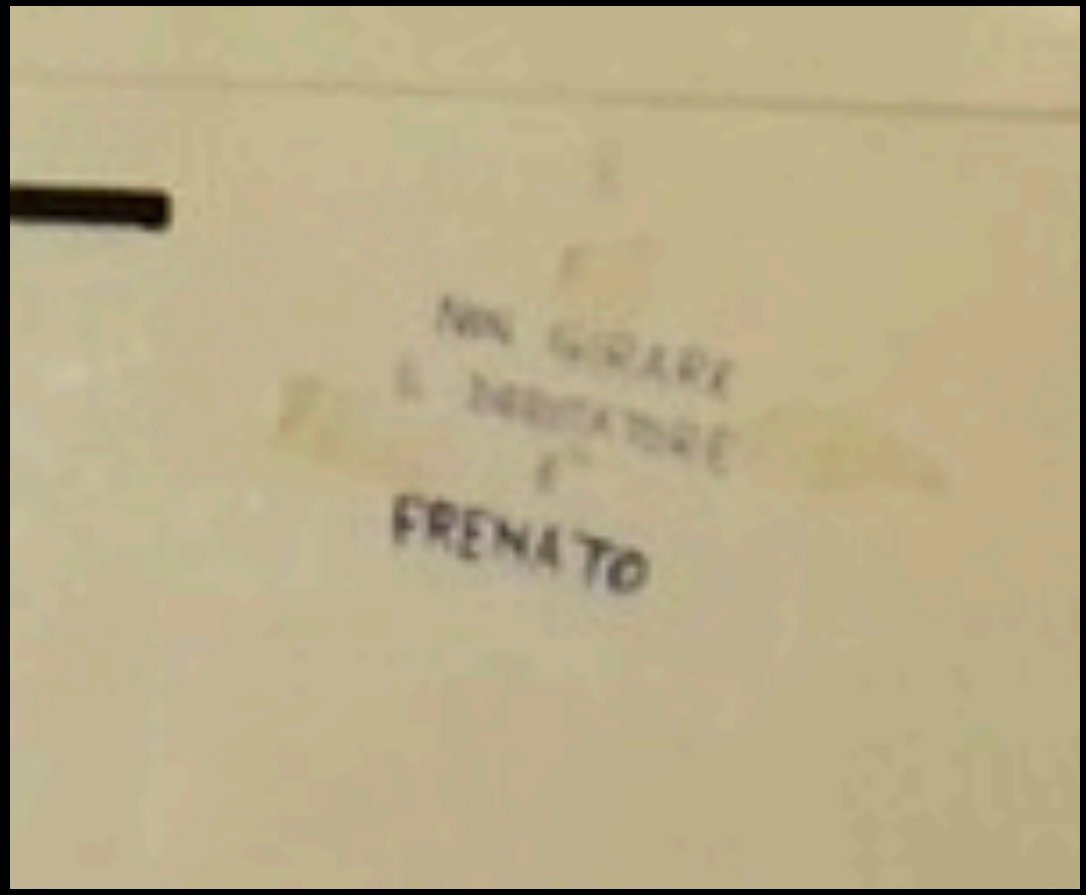
FRENATO

TELESCOPIO NAZIONALE GALILEO

DATE: 20/21.03.2002 START OBS (UT): _____ END OBS (UT): _____ INSTRUM./DETECT.: LRS + HR-V #6

OBSERVER: CORSINI TEL. OPER.: _____

SKY: coperto all'alba

	Object	R.A.	Dec	UT Start	Exp Time	Slit/Mask	Filt/Grism	Focus	Altitude	Comments
11	He			0,52	300	0,7		82		
12	FIELD N2950	09 43 02	+58 54 44	1,01	3	-		84	53	faccio fuoco e riempio a foto
13		09 42 51	+58 55 37	1,31	3	-		98		FWHM = 2.0
14	N2950 12SW			1,33	2700	0,7		99		FWHM = 4.5 marker 981,57 1024,0 off 12" SW
	INCREDIBILE! ACCENDONO IL TOSTAPANE IN COLINA E SALTA LA CORRENTE IN CONTROL ROOM !!!							FE2B		
15	He			4,15	300	0,7		04		forse inutile ma da verificare
16	FIELD N4370	12 24 39	+07 31 39	4,20	5	-		06	46	
17	N4370 PA 85			4,25	1646	0,7		07		FWHM = 2,1 Problemi guida poi risolta marker 1025,21 1024,0 center
	FIELD N4370			5,00	5	-		08	38	
18	N4370 PA 85			5,03	1954	0,7		10		FWHM = 2,8 seeing debole marker 1025,21 1024,0 center
19	HR 5777 K1	15 33 46,3	-10 02 06	5,46	2			13	49	K1 III
20				5,50	4			14		
21	He			5,53	300			15		
22	HR 6299 K2	16 57 26,4	+09 22 01	06,03	4			17	70	K2 III
23				6,05	3			18		
24	He			6,07	300			19		
25	HR 6691 K0	17 58 38	-09 18 27	6,19	4			21	49	K0 III
26				6,23	300			22		
27	HR 6866 G8	18 20 35	+03 20 26	6,36	4			24	61	G8 III
28	He			6,40	300			25		
29	HR 6866 G8			6,43	8			26		

TELESCOPIO NAZIONALE GALILEO

DATE: 20/21.03.2002 START OBS (UT): _____ END OBS (UT): _____ INSTRUM./DETECT.: LRS + HR-V #6

OBSERVER: CORSINI TEL. OPER.: _____

SKY: coperto all'alba

	Object	R.A.	Dec	UT Start	Exp Time	Slit/Mask	Filt/Grism	Focus	Altitude	Comments
11	He			0,52	300	0,7		82		
12	FIELD N2950	09 43 02	+58 54 44	1,01	3	-		84	53	faccio fuoco e riempio a foto
13		09 42 51	+58 55 37	1,31	3	-		98		FWHM = 2.0
14	N2950 12SW			1,33	2700	0,7		99		FWHM = 4.5 marker 981,57 1024,0 off 12" SW
	INCREDIBILE! ACCENDONO IL TOSTAPANE IN COLINA E SALTA LA CORRENTE IN CONTROL ROOM !!!							FE2B		
15	He			4,15	300	0,7		04		forse inutile ma da verificare
16	FIELD N4370	12 24 39	+07 31 39	4,20	5	-		06	46	
17	N4370 PA 85			4,25	1646	0,7		07		FWHM = 2,1 Problemi guida poi risolta marker 1025,21 1024,0 center
	FIELD N4370			5,00	5	-		08	38	
18	N4370 PA 85			5,03	1954	0,7		10		FWHM = 2,8 seeing debole marker 1025,21 1024,0 center
22	HR 6299 K2	16 57 26,4	+09 22 01	06,03	4			17	10	K2 III
23				6,05	3			18		
24	He			6,07	300			19		
25	HR 6691 K0	17 58 38	-09 18 27	6,19	4			21	19	K0 III
26				6,23	300			22		
27	HR 6866 G8	18 10 35	+03 20 26	6,36	4			24	61	G8 III
28	He			6,40	300			25		
29	HR 6866 G8			6,43	1			26		

INCREDIBILE! ACCENDONO IL TOSTAPANE IN COLINA E SALTA LA CORRENTE IN CONTROL ROOM !!!

Telescopio Nazionale GALILEO

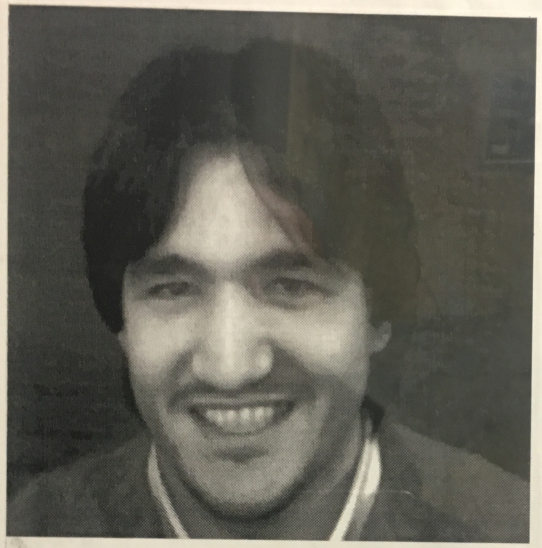

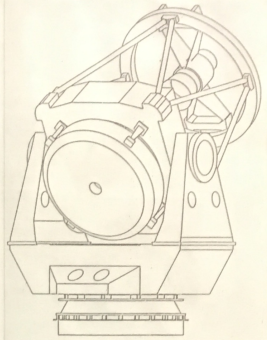

Andrea
BARUFFOLO

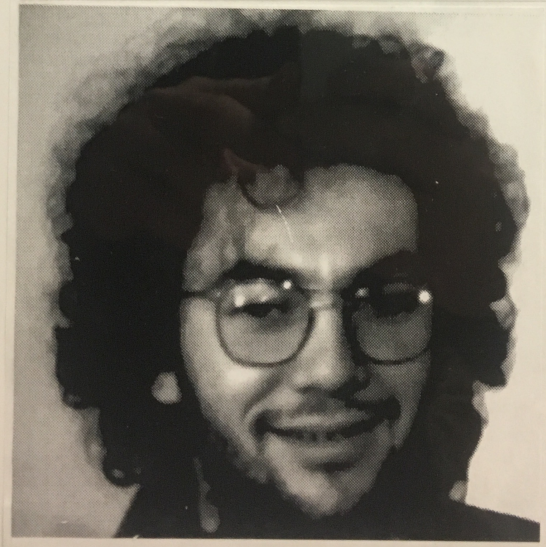

Roberto
RAGAZZONI

In retrospective

- Even the LBT has been a conservative approach if you consider the innovations that was injected into TNG as differences wrt the NTT
- Surely there were layers where we were allowed to play and others where results must come in time (or nearly so…)
- We learn from a lot of people in ESO: Tarenghi, Franza, Noethe, Wilson are just the one who I bothered more…
- Although it has been the first national challenge the arena was international (Jerry Nelson, Roger Angel, The brit for the poyinting)
- Most of the innovations should wait for a further bunch of years (and projects) to get maturity and recognition…
- Ideas grow around a project, if you can afford to allow them…